Operating Manual

Alpha 20X



DMAN-00IM-1761_REV.G - 07/2025

DIGITAL MULTIFUNCTION INSTRUMENT

Programmable Multi-function Digital Panel Meter
Installation & Operating Instructions

Section **Contents**

I. Precautions and safety to follow

II. Safety Symbols

1. Introduction

2. Measurement Reading Screens

3. Programming

- 3.1 Password Protection
- 3.2 Menu Selection
  - 3.2.1 System Parameter Selection Screen
    - 3.2.1.1 System Type
    - 3.2.1.2 Potential Transformer Primary Value
    - 3.2.1.3 Potential Transformer Secondary Value
    - 3.2.1.4 Current Transformer Primary Value
    - 3.2.1.5 Current Transformer Secondary Value
    - 3.2.1.6 Demand Integration Time
    - 3.2.1.7 Auto Scrolling
    - 3.2.1.8 No. of Poles Selection
    - 3.2.1.9 Energy Display on Modbus
    - 3.2.1.10 Energy Digit Reset Count
  - 3.2.2 Communication Parameter Selection Screen
    - 3.2.2.1 Address Setting
    - 3.2.2.2 RS 485 Baud Rate
    - 3.2.2.3 RS 485 Parity Selection
  - 3.2.3 Reset Parameter Selection Screen
    - 3.2.3.1 Resetting Parameter
  - 3.2.4 Output Option Selection Screen (Menu)
    - 3.2.4.1 Configuration of Output
      - 3.2.4.1.1 Relay Output Selection Menu
        - 3.2.4.1.1.1 Pulse Output

3.2.4.1.1.1.1 Assignment of Energy to Pulse
3.2.4.1.1.1.2 Pulse Duration Selection
3.2.4.1.1.1.3 Pulse Rate
3.2.4.1.1.2 Limit output
3.2.4.1.1.2.1 Assignment of Limit Output to Parameter
3.2.4.1.1.2.2 Limit Configuration
3.2.4.1.1.2.3 Trip point selection
3.2.4.1.1.2.4 Hysteresis selection
3.2.4.1.1.2.5 Energizing delay time
3.2.4.1.1.2.6 De-energizing delay time
3.2.5 Quit screen

4. Run-Hour
5. On-Hour
6. Number of Interruption
7. Negative Sign Indication
8. Relay Output
8.1 Pulse output
8.2 Limit Switch
9. RS 485 (ModBus)
9.1 User Assignable Modbus Register
10. Phasor Diagram
11. Installation
11.1 EMC Installation Requirements
11.2 Case Dimensions and Panel Cut-out
11.3 Wiring
11.4 Auxiliary Supply
11.5 Fusing
11.6 Earth / Ground Connections
12. Connection Diagrams
13. Specification

I) Precautions and safety to follow

a) The product must be installed and serviced only by trained personnel.
We strongly recommend reading the 'Installation Manual' thoroughly before installing product.

b) Failure to observe precautions can result in serious or even fatal injury as well as equipment
damage. Check the auxiliary supply voltage and polarity(For DC) before making connection.

c) Do not exceed the specified parameters like Voltage, Current , Frequency etc ratings.

d) Prior to any work with the product, isolate the voltage inputs and auxiliary power supply. and short-circuit the secondary winding of all current transformers.

e) Make sure that there are no loose connections, stray wires / exposed conductors. Make sure that all connectors are correctly seated and firmly in place.

f) Use a slightly damp cloth and isolate the product from the Input / Aux supply before cleaning it. Do not use solvents / abrasive materials to clean the product.

g) The guarantee is no longer valid if the instrument is further tampered.

h) Disconnect the supply from the meter and de-energise all other circuits before installation.

I) Shielded cable should be used for RS-485 connections while shield to signal ground must be connected to meter-end only.

j) This meters should only be installed indoors by suitably trained persons. This meter is for indoor use only.

k) Impact rating is IK06 and the rated impact energy level is 1 Joule.

l) The installation(Measurement) category is CAT III.

m) It is recommended to use wire with lug for connection with meter.

n) For disconnecting the device a switch or circuit-breaker shall be included at the site and shall be within easy reach of the operator.

II) Safety Symbols : Meaning of symbols on the instrument

	Warning concerning a point of danger (Attention:observe documentation)
	Equipment protected throught by Double insulation or reinforced Insulation
	DC voltage /Current
	AC/DC voltage
	Observe local safety norms when disposing of the product at the end of their life to ensure that they do not enter the household waste stream.
	Danger of Electrocution

1. Introduction

The Multifunction Meter is a panel mounted 96 x 96mm DIN Quadratic Digital Panel Meter, which measures important electrical parameters in 3P4W, 3P3W, 1P2W and 1P3W networks and replaces the multiple analog panel meters.

It measures electrical parameters like AC Voltage, Current, Frequency, Power, Energy(Active / Reactive / Apparent), Phase Angle, Power Factor & many more. The instruments comes with 3 Line 4 Digits ultra bright LED display with clearly visible annunciated units with bright LED from back side.



The Multifunction Meter can be configured & programmed on site for PT Primary, PT Secondary, CT Primary, CT Secondary & System Type (3P4W/3P3W/1P2W/1P3W).

The front panel has four Keys for user interface to scroll through the available parameters. These four keys has function as follows :

1. V/A :-Selects & scrolls through Voltage and Current parameters
2. P :-Select & scrolls through Phase and System Power parameters: . Active Power, Apparent Power, Reactive Power, Phase Angle, Power Factor, then System Apparent, Reactive, Active Power, Phase Angle, Power Factor, then Current Demand, KVA Demand, Max Current Demand, Max KVA Demand, Import kW Demand, Max Import kW Demand, Export kW Demand, Max Export kW Demand and then back to Active Power.
3. E :-Select & scrolls through Energy parameters : Active Energy (Import), Active Energy (Export), Reactive Energy (Inductive), Reactive Energy (Capacitive), Apparent Energy and then back to Active Energy (Import).4. Sys :-Select & scroll through System parameters : Voltage, Current, Active Power, Reactive Power, Frequency, RPM, Power Factor, Maximum Voltage and Current, Minimum Voltage and Current, %THD of Voltage and Current, Run Hour, On Hour, Number of Interruptions.

The Multifunction Meter come with 14mm display and units annunciated from back side, which enables to take reading from long distance. The problem with conventional LED annunciators is overcame in this Multifunction Meter.

2. Measurement Reading Screens

In normal operation the user is presented with the measurement reading screens. These screens may be scrolled through one at a time by pressing the “V/A” key for Voltages and Currents, “P” key for phase Active, Reactive & Apparent Power, System Apparent, Reactive & Active Powers and all Demand parameters. “E” key for Active Energy (Import), Active Energy (Export), Reactive Energy (Inductive), Reactive Energy (Capacitive) and Apparent Energy, “Sys” key for System Voltage-Current - Active Power, Max. and Min. values of System Voltage and Current, Frequency, RPM, Run hours, On hours, No. of Aux Interruptions.

TABLE 1: Measured Parameters

Measured Parameter	Unit	3P4W	3P3W	1P2W	1P3W
System Voltage	V	✓	✓	✓	✓
System Current	A	✓	✓	✓	✓
Voltage L1	V	✓	×	✓	✓
Voltage L2	V	✓	×	×	✓
Voltage L3	V	✓	×	×	×
Voltage L12	V	✓	✓	×	✓
Voltage L23	V	✓	✓	×	×
Voltage L31	V	✓	✓	×	×
Current L1	A	✓	✓	✓	✓
Current L2	A	✓	✓	×	✓
Current L3	A	✓	✓	×	×
Frequncy	Hz	✓	✓	✓	✓
System Active Power	kW	✓	✓	✓	✓
Active Power L1	kW	✓	×	✓	✓
Active Power L2	kW	✓	×	×	✓
Active Power L3	kW	✓	×	×	×
System Reactive Power	kVAr	✓	✓	✓	✓
Reactive Power L1	kVAr	✓	×	✓	✓
Reactive Power L2	kVAr	✓	×	×	✓
Reactive Power L3	kVAr	✓	×	×	×
System Apparent Power	kVA	✓	✓	✓	✓
Apparent Power L1	kVA	✓	×	✓	✓
Apparent Power L2	kVA	✓	×	×	✓
Apparent Power L3	kVA	✓	×	×	×
System Phase Angle	Degree	✓	✓	✓	✓
System Power Factor	–	✓	✓	✓	✓
Power Factor L1	–	✓	×	✓	✓
Power Factor L2	–	✓	×	×	✓
Power Factor L3	–	✓	×	×	×
Phase Angle L1	Degree	✓	×	✓	✓
Phase Angle L2	Degree	✓	×	×	✓
Phase Angle L3	Degree	✓	×	×	×
Import Active Energy	Wh	✓	✓	✓	✓
Export Active Energy	Wh	✓	✓	✓	✓
Inductive Reactive Energy	VArh	✓	✓	✓	✓

TABLE 1 Continued

Measured Parameter	Unit	3P4W	3P3W	1P2W	1P3W
Capacitive Reactive Energy	Varh	✓	✓	✓	✓
Apparent Energy	VAh	✓	✓	✓	✓
System RPM	–	✓	✓	✓	✓
Min and Max System Voltage	V	✓	✓	✓	✓
Min and Max System Current	A	✓	✓	✓	✓
Run Hour	hour	✓	✓	✓	✓
On Hour	hour	✓	✓	✓	✓
Number Of Interruptions	–	✓	✓	✓	✓
Current Demand	A	✓	✓	✓	✓
KVA Demand	KVA	✓	✓	✓	✓
Import kW Demand	KW	✓	✓	✓	✓
Export kW Demand	KW	✓	✓	✓	✓
Max Current Demand	A	✓	✓	✓	✓
Max KVA Demand	KVA	✓	✓	✓	✓
Max Import kW Demand	KW	✓	✓	✓	✓
Max Export kW Demand	KW	✓	✓	✓	✓
Neutral Current	A	✓	×	×	✓
Max Neutral Current	A	✓	×	×	✓
%THD Voltage L1	%	✓	✓	✓	✓
%THD Voltage L2	%	✓	×	×	✓
%THD Voltage L3	%	✓	✓	×	×
%THD Current L1	%	✓	✓	✓	✓
%THD Current L2	%	✓	×	×	✓
%THD Current L3	%	✓	✓	×	×
System Voltage THD	%	✓	✓	✓	✓
System Current THD	%	✓	✓	✓	✓
Min and Max Import Active Power	KW	✓	✓	✓	✓
Min and Max Export Active Power	KW	✓	✓	✓	✓
Min and Max Inductive Reactive Power	Var	✓	✓	✓	✓
Min and Max Capacitive Reactive Power	Var	✓	✓	✓	✓
Min and Max Apparent Power	VA	✓	✓	✓	✓

a. “V/A” Key:

Screen 1 : Voltage Line to Neutral (For 3P4W only)



Screen 2 : Voltage Line to Line (For 3P4W & 3P3W)



Screen 3 : Currents



Screen 4 : % Total Harmonic Distortion of VLN



Screen 5 : % Total Harmonic Distortion of Currents



Screen 6 : Neutral Current



b. “P” Key:

Screen 1 : Line 1 Active, Reactive, Apparent Power (For 3P4W Only)



Screen 2 : Line 2 Active, Reactive, Apparent Power (For 3P4W Only)



Screen 1 : Line 3 Active, Reactive Power, Apparent Power (For 3P4W Only)



Screen 4 : L1, L2, L3 * Power Factor (For 3P4W Only)

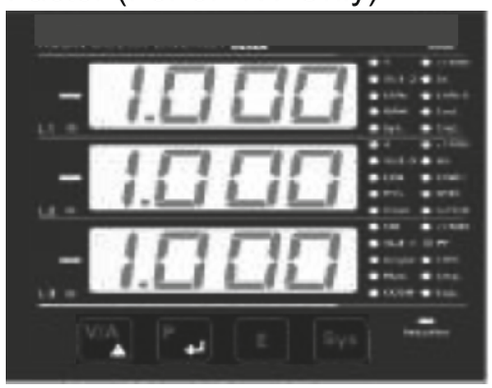

Screen 5 : L1, L2, L3 Phase Angle (For 3P4W Only)



Screen 6 : Max Current Demand



Screen 7 : Max KVA Demand



Screen 8 : Max KW Demand (Import)



Screen 9 : Max KW Demand (Export)

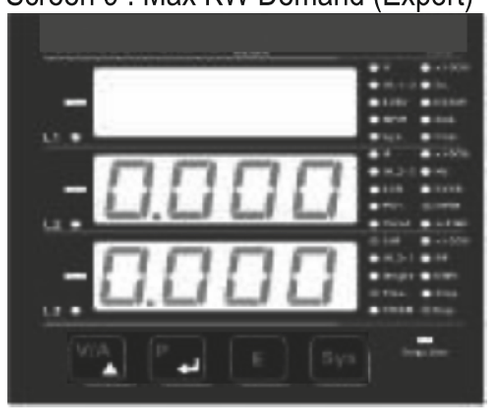

NOTE: *For per phase power factor the screen value will toggle as value-Ind OR value-Cap

c. “E” Key:

Screen 1 : Active Energy (Import)



Screen 2 : Active Energy (Export)



Screen 3 : Reactive Energy (Inductive)



Screen 4 : Reactive Energy (Capacitive)



Screen 5 : Apparent Energy

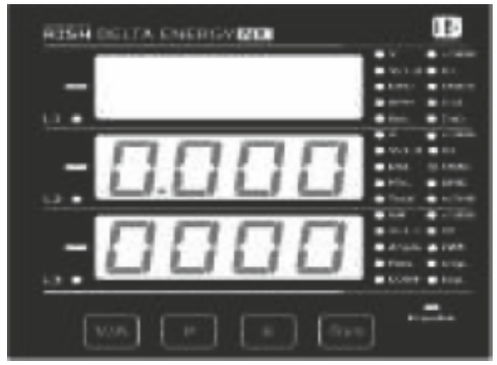

d. “Sys” Key:

Screen 1 : System Values
(Voltage, Current, Power)



Screen 2 : System Values
(Frequency, PF)

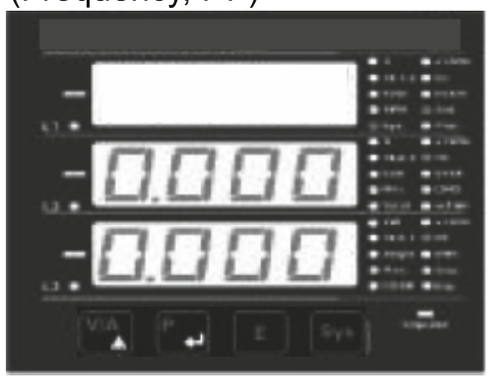

Screen 3 : System Values
(System RPM & Angle)



Screen 4 : System Values
(Reactive and Apparent Power)



Screen 5 : System Max Values



Screen 6 : System Min Values



Screen 7 : System Values
(% THD of Voltage & Current)

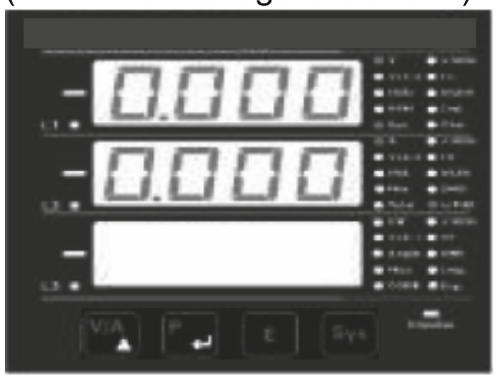

Screen 8 : Phase Absent



Screen 9 : Run Hours



Screen 10 : ON Hours



Screen 11 : No. of Interruptions



Setup Parameter Screens

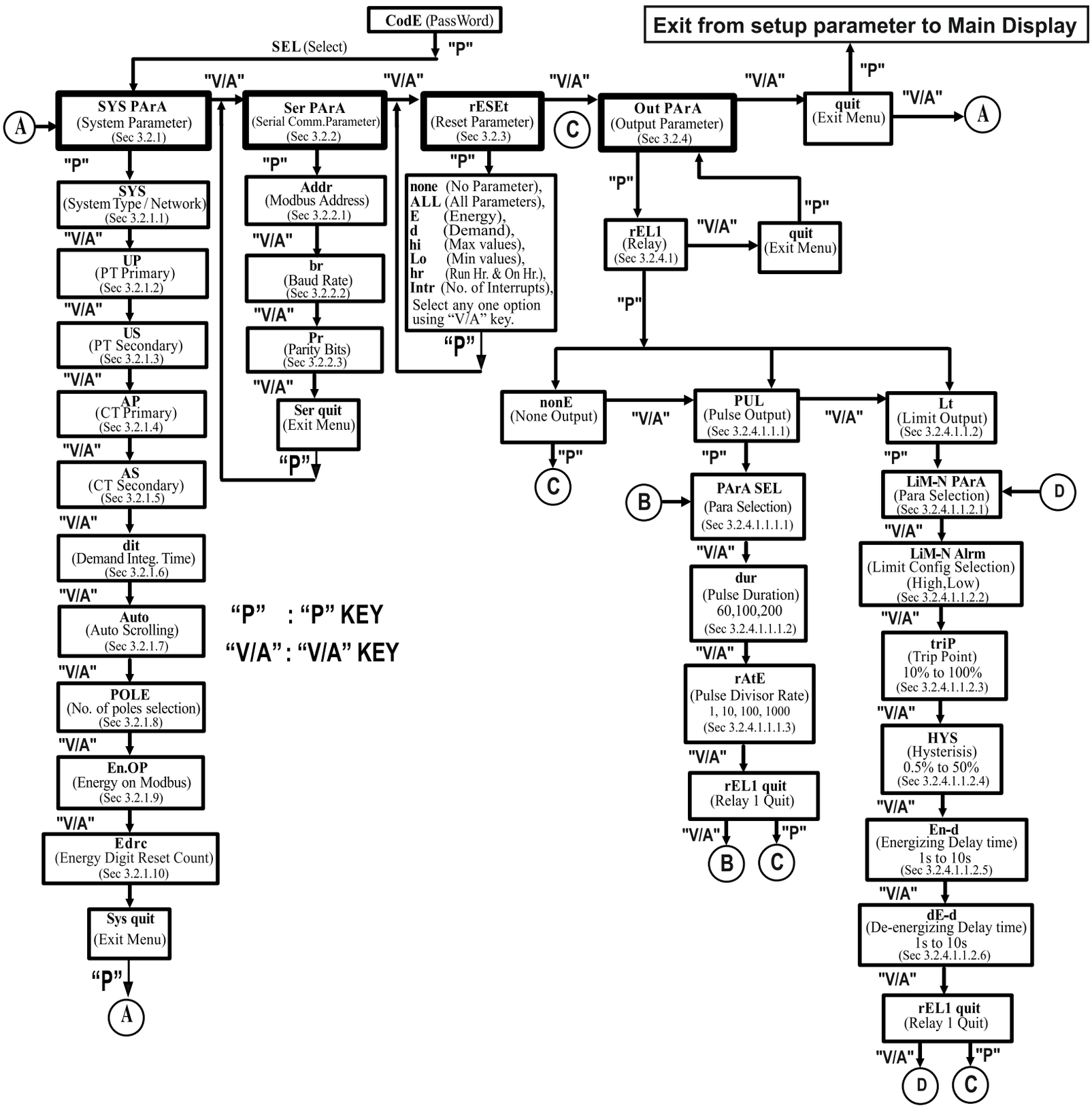

3. Programming

The following sections comprise step by step procedures for configuring the Multifunction Meter for individual user requirements.
To access the set-up screens press and hold “P” key for 5 seconds.
This will take the user into the password protection entry stage (section 3.1).

3.1. Password Protection

Password protection can be enabled to prevent unauthorised access to set-up screens, by default password protection is not enabled.
Password protection is enabled by selecting a four digit number other than 0000, setting a password of 0000 disables the password protection.



Enter Password, prompt for first digit. (Blinking digit denotes that value will be changing).
Press the “V/A” key to scroll the value of first digit from 0 through to 9, the value will wrap from 9 round to 0.
Press the “P” key to advance to next digit.
In special case where the Password is “0000” pressing the “P” key when prompted for the first digit will advance to “Password confirmed” screen.



Enter Password, first digit entered, prompt for second digit. (Blinking digit denotes that value will be changing).
Use the “V/A” key to scroll the value of the second digit from 0 through to 9, the value will wrap from 9 round to 0.
Press the “P” key to advance to next digit.



Enter Password, second digit entered, prompt for third digit. (Blinking digit denotes that value will be changing).
Use the “V/A” key to scroll the value of the third digit from 0 through to 9, the value will wrap from 9 round to 0.
Press the “P” key to advance to next digit.



Enter Password, third digit entered, prompt for fourth digit. (Blinking digit denotes that value will be changing).
Use the “V/A” key to scroll the value of the fourth digit from 0 through to 9, the value will wrap from 9 round to 0.
Press the “P” key to advance to verification of the password.



Enter Password, fourth digit entered, awaiting verification of the password.

Password confirmed.



Pressing “V/A” key will advance to the “New/Change Password” entry stage. Pressing the “P” key will advance to the menu selection screen. (See Section 3.2).

Password Incorrect.



The unit has not accepted the password entered. Pressing the “V/A" key will return to the enter password stage. Pressing the “P” key exits the password menu & returns operation to the measurement reading mode.

New / Change Password



(Blinking digit denotes that value will be changing) Pressing the “V/A” key will scroll the value of the first digit from 0 through to 9, the value will wrap from 9 round to 0.

Pressing the “P” key to advance the operation to the next digit and sets the first digit, in this case to “2”



New/Change Password, first digit entered, prompting for second digit. (Blinking digit denotes that value will be changing). Pressing the “ V/A” key will scroll the value of the second digit from 0 through to 9, the value will wrap from 9 round to 0.

Pressing the “P” key to advance the operation to the next digit and sets the second digit, in this case to “1”



New / Change Password, second digit entered, prompting for third digit. (Blinking digit denotes that value will be changing). Pressing the “V/A” key will scroll the value of the third digit from 0 through to 9, the value will wrap from 9 round to 0.

Pressing the “P” key to advance the operation to the next digit and sets the third digit, in this case to “5”



New/ Change Password, third digit entered, prompting for fourth digit. (Blinking digit denotes that value will be changing). Pressing the “V/A” key will scroll the value of the fourth digit from 0 through to 9, the value will wrap from 9 round to 0. Pressing the “P” key to advance the operation to the new password confirmed” & sets the fourth digit in this case to “3”.

New Password Confirmed



Pressing the “V/A” key will return to the “New/Change Password ”.
Pressing the “P” key will advances to the Menu Selection screen (See Section 3.2).

3.2 Menu Selection

3.2.1 System Parameter Selection Screen



This screen is used to select the different system parameter like “System Type”, “CT Ratio”, “ PT Ratio ” etc, pressing the “ P ” key allows the user to set different system parameters (See Section 3.2.1.1 to 3.2.1.10).
Pressing the “V/A” key will advance to Communication Parameter Selection screen (See Section 3.2.2).

3.2.2 Communication Parameter Selection Screen



This screen is used to select the different communication parameters like “Address ”, ”RS485 Parity” and ”RS485 Baudrate”.
Pressing the “P” key allows the user to set different communication parameters. (See Section 3.2.2.1 to 3.2.2.3). Pressing the “V/A” key will advance to Reset Parameter screen. (See Section 3.2.3).

3.2.3 Reset Parameter Selection Screen



This screen is used to reset the different parameters.
Pressing the “P” key allows the user to reset different system parameters (See Section 3.2.3.1).
Pressing the “V/A” key will advance to Output Option Selection screen (See Section 3.2.4).

3.2.4 Output Option Selection Screen



This screen will allow the user to select output option like “Relay” Output.
Pressing the “P” key allows the user to select & configure the output option (See Section 3.2.4.1). Pressing the “V/A” key will advance to Quit screen. (See Section 3.2.5)

3.2.5 Quit Screen



This screen will allow the user to quit the menu pressing the “P” key will allow the user to quit from menu & return to measurement screen.
Pressing the “V/A” key will advance to System Parameter selection screen (See Section 3.2.1).

3.2.1 System Parameters Selection

3.2.1.1 System Type



This screen is used to set the System Type 3P4W, 3P3W, 1P3W & 1P2W.
Pressing the “V/A”key advances to the “Potential Transformer Primary Value” screen (See Section 3.2.1.2).

Pressing the “P” key will enter the System Type edit mode & further pressing of “V/A” scroll the values through values available.
Pressing the “P” key again sets the displayed value and pressing ”V/A” key will advance to “Potential Transformer Primary Value” screen. (See section 3.2.1.2)

3.2.1.2 Potential Transformer Primary Value

The nominal full scale voltage which will be displayed as the **Line to Line** voltages for all system types. The values displayed represent the voltage in **kilovolts** (note “K” annunciator).



Pressing the “V/A” key advances to the “Potential Transformer Secondary Value” screen (See Section 3.2.1.3).

Pressing the “P” key will enter the Potential Transformer Primary Value edit mode.

Initially the “multiplier must be selected, pressing the “V/A” key will move the decimal point position to the right until it reaches # # #.# after which it will return to #. # # #.
Pressing the “P” key accepts the present multiplier (decimal point position) and advances to the Potential Transformer Primary digit edit mode.

Note: PT Values must be set as Line to Line Voltage for Primary as well as Secondary for all System Types (3P3W/3P4W/1P3W/1P2W).



Pressing the “V/A” key will scroll the value of the most significant digit from 0 through to 9 unless the presently displayed potential transformer primary value together with the current transformer primary value, previously set, would result in a maximum power of greater than 1000 MVA per phase in which case the digit range will be restricted.
Pressing the “P” key accepts the present value at the cursor position and advances the cursor to the next less significant digit.
The PT Primary value can be set from 100VL-L to 1200 kVL-L.
Note: The flashing decimal point indicates the cursor position, a steady decimal point will be present to identify the scaling of the number until the cursor position coincides with the steady decimal point position. At this stage the decimal point will flash.

When the least significant digit has been set pressing the “P” key will advance to the Potential Transformer Primary Value confirmation stage.
Screen showing display of 0.120 kV i.e. 120 Volts indicating steady decimal point and cursor flashing at the “hundreds of volts” position.
If the scaling is not correct, pressing the “V/A” key will return to the “Potential Transformer Primary digits flashing indicating Value Edit” stage with that multiplier (decimal point position) should be selected.

Pressing the “P” key sets the displayed value and will advance to the “Potential Transformer Secondary Value” screen (See Section 3.2.1.3).

3.2.1.3 Potential Transformer Secondary Value

The value must be set to the nominal full scale secondary voltage which will be obtained from the Transformer when the potential transformer (PT) primary is supplied with the voltage defined in 3.2.1.2 potential transformer primary voltage.
The ratio of full scale primary to full scale secondary is defined as the transformer ratio.
The PT Secondary value can be set from 100VL-L to 500VL-L.



Pressing the “V/A” key advances to the Current Transformer Primary Value” screen (See Section 3.2.1.4).

Pressing the “P” key will enter the Potential Transformer Secondary Value edit mode.

Pressing the “P” key accepts the present value at the cursor position and advances the cursor to the next less significant digit

If the scalling is not correct, pressing the “V/A” key will return to the “Potential Transformer Secondary Value Edit screen.
Pressing the “P” key sets the displayed value and “V/A” key will advance to the "Current Transformer Primary Value" screen (See Section 3.2.1.4).

3.2.1.4 Current Transformer Primary Value

The nominal Full Scale Current that will be displayed as the Line currents. This screen enables the user to display the Line currents inclusive of any transformer ratios, the values displayed represent the Current in Amps.

Pressing the “V/A” key advances to the Current Transformer Secondary Value” screen (See Section 3.2.1.5).



Pressing the “P” key will enter the Current Transformer Primary Value edit mode. This will scroll the value of the most significant digit from 0 through to 9, unless the presently displayed Current Transformer Primary Value together with the Potential Transformer Primary Value results in a maximum power of greater than 1000 MVA in which case the digit range will be restricted, the value will wrap. Example: If primary value of PT is set as 692.8kVL-L (max value) then primary value of Current is restricted to 1736A.

Pressing the “P” key will advance to the next less significant digit. (* Denotes that decimal point will be flashing).

The “Maximum Power” restriction of 1000 MVA refers to 120% of nominal current and 120% of nominal voltage (i.e 694.4 MVA nominal power per phase.).The minimum value allowed is 1, the value will be forced to 1 if the display contains zero when the “P” key is pressed. If the scaling is not correct, Pressing the “V/A” key will return to the Current Transformer Primary Value edit stage with the most significant digit highlighted (associated decimal point flashing) and the bottom line of the display will be blanked.

3.2.1.5 Current Transformer Secondary Value



This screen is used to set the value for Current Transformer Secondary value, “5” for 5A or “1” for 1A can be selected. Pressing “V/A” key advances to the Demand Integration Time (See Section 3.2.1.6).

Pressing the “P” key will enter the CT Secondary value edit mode and pressing the “V/A” key scroll the value through the values available.

Pressing “P” key sets the displayed value and “V/A key” will advance to “Demand Integration Time” screen (See Section 3.2.1.6).

3.2.1.6 Demand Integration Time



This screen is used to set the period over which current and power readings are to be integrated. The unit of displayed readings is minutes.

Pressing the “P” key will enter the Demand Integration Time edit mode and pressing “V/A” key will scroll the value from 0 through to 9, as applicable.
The Demand Integration time can be set from 1 to 60. Pressing “P” key sets the displayed value and “V/A” key will advance to Auto Scroll screen (See Section 3.2.1.7).

3.2.1.7 Auto Scrolling



This screen allows user to enable screen scrolling.

Pressing ”V/A” key advance to the No. of Poles Selection screen (See Section 3.2.1.8).



Pressing the “P” key will enter the Auto Scrolling Screen edit mode and toggle the status ‘Yes’ and ‘No’.
Pressing the “P” key will select the status displayed and “V/A” key advance to the No. of Poles Selection screen (See Section 3.2.1.8).

3.2.1.8 No. of Poles Selection

This screen enables to set No. of poles of a Generator of which RPM is to be measured and to which the instrument is connected to monitor its parameters.



Pressing “V/A” key advances to Energy Display on Modbus screen (See section 3.2.1.9).
Pressing the “P” key will enter the No. of Poles selection edit mode.

Pressing “V/A” key scroll the number from 02 to 40 in step of 2. After 40 it scrolls the number again to 02.

Pressing “P” key set the number on screen as number of poles of generator & “V/A”key advance to Energy Display on Modbus screen (See Section 3.2.1.9).

3.2.1.9. Energy Display on Modbus

This screen enable user to set energy in terms of Wh / kWh / MWh on RS 485 Output as per the requirement. Same applicable for all types of energy. Pressing “V/A” key advances to the Energy Digit Reset Count screen (See Section 3.2.1.10).



Pressing the “ P” key will enter the Energy Display on Modbus edit mode and pressing the “V/A” key scroll the value through values 1,2 & 3 wrapping back to 1.

1: Energy in Wh; 2: Energy in kWh

3: Energy in MWh.

Pressing “ P ” key sets the displayed value and“V/A” key will advance to the Energy Digit Reset Count screen (See section 3.2.1.10).

Note : Default value is set to ‘1’ i.e. Energy on Modbus will be in terms of Wh/VArh /VAh/Ah as applicable to different parameters.

3.2.1.10 Energy Digit Reset Count

This screen enables user for setting maximum energy count after which energy will reset to zero depending on setting of Wh, kWh & MWh. Pressing the ”V/A” key advances to the System Parameter Quit screen (See Section 3.2.1.10).



Pressing the “P” key will enter the Energy digit reset count edit mode, and pressing the “V/A” key will scroll the value of reset count from 7 for Wh, 8 for kWh & 9 for MWh.

Ex. If energy o/p is set to Wh, it will set Energy digit count to 7 then energy will reset after “99,99,999” & then will rollback to zero.

Pressing “ P ” key sets the displayed value and “V/A” key will advance to the System Parameter Quit screen, further pressing of "P" key will advance to System Parameter Selection screen (See Section 3.2.1).

Note :

1) Default value is set to “7” i.e if energy count reaches to 7 digit it will rollback to zero.

2) Energy displays on modbus is set to (2) & energy digit reset count is set to 7. Energy screen on display will show “OL” i.e overload. When energy crosses the 6 digit count.

3) Energy displays on modbus is set to (3) & energy digit reset count is set to 8. Energy screen on display will show “OL” i.e overload. When energy crosses the 7 digit count.

3.2.2 Communication Parameter Selection

3.2.2.1 Address Setting



This screen applies to the RS 485 output only. This screen allows the user to set RS 485 parameter for instruments.
The range of allowable address is 1 to 247. Enter Address, prompt for first digit.

Press the “V/A” key to scroll the value of the first digit.
Press the “P” key to advance to next digit.



Enter Address, first digit entered, prompt for second digit. (Blinking digit denotes that value will be changing).
Use the “V/A” key to scroll the value of the second digit.



Enter Address, second digit entered, prompt for third digit. (Blinking digit denotes that value will be changing).
Use the “V/A” key to scroll the value of the third digit.



Enter Address for third digit.
Press the “V/A” key to advance to next Screen “RS485 Baud Rate” (See Section 3.2.2.2).
Pressing the “P” key will re-enter the Address edit mode.

3.2.2.2 RS 485 Baud Rate



This screen allows the user to set Baud Rate of RS 485 port. The values displayed on screen are in kbaud.
Pressing “V/A”key advance to the Parity Selection screen (See Section 3.2.2.3).

Pressing the “P” key will enter the Baud Rate edit mode and pressing “V/A” key will scroll the value through 2.4, 4.8, 9.6, 19.2, 38.4, 57.6 & back to 2.4.
Pressing the “P” key will select the value pressing “V/A” key it advances to the Parity Selection screen (See Section 3.2.2.3).

3.2.2.3 RS 485 Parity Selection

This screen allows the user to set Parity & Number of Stop Bits of RS 485 port.



Pressing “V/A” keys advances to Serial Parameter Quit screen.
Pressing the “P” key will enter the Parity & Stop Bit edit mode & pressing “V/A” key scroll the value available.

odd : odd parity with one stop bit
no 1 : no parity with one stop bit
no 2 : no parity with two stop bit
E : even parity with one stop bit



Pressing the “P” key will set the value.

Pressing the “V/A” key again will jump to the Serial parameter Quit screen.

3.2.3 Reset Parameter Selection

3.2.3.1 Resetting Parameter

The following screens allow the users to reset all Energy, Lo (Min), Hi (Max), Demand, Run hour, On hour & No. of Interrupts.



Reset “None” select: Pressing “P” key advances to Reset Parameter selection screen (See Section 3.2.3). Pressing the “V/A” key will enter the Reset option mode & scroll through parameter and wrapping back to none.



Reset option “E” select: (Resets all Energies) Pressing “P” key will select the value and advance to reset all Energies (Import Active Energy, Export Active Energy, Inductive Reactive Energy, capacitive Reactive, Apparent Energy).



Reset option “d” select: (Reset Max A Demand Max KVA Demand, Max kW Demand (Import/Export)). Pressing “P” key will select the value and resets all Max Demand parameters.



Reset option “hi” select: (Reset Max parameters) Pressing “P” key will select the value and resets all Max parameters.



Reset option “Lo” select: (Reset Min parameters). Pressing “P” key will select the value and advance to the reset all Low parameters.



Reset option “hr” select: (Reset ON Hour & Run Hour). Pressing “P” key will select the value and will reset On hour & Run Hour.



Reset option “Intr” select: (Reset Number of Interrupt) Pressing “P” key will select the value and will reset number of auxiliary supply interruption count.



Reset option “All” select: (Resets ALL resettable parameter) Pressing “P” key will select the value and advance to the reset ALL parameters.

3.2.4. Output Option Selection Menu

3.2.4.1 Configuration of Output



This screen applies to the Relay Output option Selection.

Pressing “P” key will select the rEL1 Output Selection Screen (See Section 3.2.4.1.1).

Pressing the “V/A” key will advance to the Quit screen.



This screen allows the user to quit the output option

Pressing “P” key will advance to the Output Parameter selection (See section 3.2.4)

Pressing the “V/A” key will go back to Relay output option (See section 3.2.4.1).

3.2.4.1.1 Relay output Selection Menu

3.2.4.1.1.1 Pulse Output



This screen is used to assign Relay in Pulse output mode.

Pressing “P” key will advance to the Pulse output configuration (See section 3.2.4.1.1.1.1)

Pressing “V/A” key will show “Limit”output option (See section 3.2.4.1.1.2)

3.2.4.1.1.2 Limit Output



This screen is used to assign Relay in limit output mode.

Pressing “P” key will assign Limit output mode (See Section 3.2.4.1.1.2.1).

Pressing the “V/A” key will go back to the pulse option Screen (See Section 3.2.4.1.1.1).

3.2.4.1.1.1.1 Assignment of Energy to Pulse Output :

This screen allows the user to assign pulse output to energy.

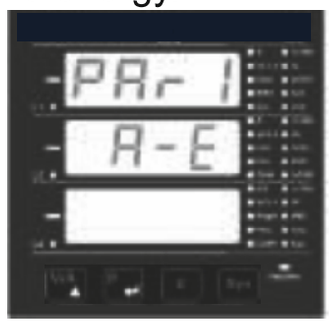

Pressing “V/A” key accepts the present setting and advance to “Pulse Duration Selection” (See Section 3.2.4.1.1.1.2).

Pressing the “P” key will enter into edit mode and scroll through the energy setting.

A - E : Apparent Energy
I - E : Import Energy (Active)
E - E : Export Energy (Active)
I - rE : Inductive Reactive Energy
E - rE : Capacitive Reactive Energy

Pressing the “P” key will set the value & “V/A” advances to the Pulse duration selection (See Section 3.2.4.1.1.1.2).

3.2.4.1.1.1.2 Pulse Duration Selection

This screen applies only to the Pulsed output mode of relay.



Pressing “V/A” key advance to Pulse Rate Selection screen (See Section 3.2.4.1.1.1.3). Pressing the “P” key will enter the Pulse Duration edit mode and scroll the value through 60, 100, 200 and wrapping back to 60.

Pressing the “P” key will select the value and pressing “V/A” key will advances to Pulse Rate Selection screen (See Section 3.2.4.1.1.1.3).

3.2.4.1.1.1.3 Pulse Rate

This screen applies to the Pulse Output option only. The screen allows user to set the energy pulse rate divisor. Divisor values can be selected through 1,10,100,1000.



Pressing “V/A” key advances to the Output Quit screen. Pressing the “E” key will enter the Pulse rate divisor edit mode & pressing “V/A” key scroll the value through 1, 10, 100, 1000 and wrapping back to 1.

Pressing the “P” key will select the value and pressing “V/A” key will advances to Output Quit screen.

3.2.4.1.1.2.1 Assignment of Limit Output to Parameter

This screen is for Limit output mode selection. It allows the user to set Limit output corresponding measured value. Refer Table 2 “Parameter for Limit Output” for assignment.



Pressing “V/A” key advance to the Limit Configuration Selection screen (See Section 3.2.4.1.1.2.2). Pressing the “P” key will enter the Limit Output edit mode. Pressing the “V/A” scroll the values, as per Table 2: “Parameter for Limit Output”.

Pressing the “P” key sets the displayed value & pressing “V/A” key will advance to the Limit Configuration Selection screen (See Section 3.2.4.1.1.2.2).

3.2.4.1.1.2.2 Limit Configuration Select

This screen is used to set the Limit Configuration, four different types of configuration can be selected:



Hi - E (High Alarm & Energized Relay)
Hi - d (High Alarm & De-Energized Relay)
Lo - E (Low Alarm & Energized Relay)
Lo - d (Low Alarm & De-Energized Relay)

(For detail refer to section 8.2).

Pressing the “V/A” key advances to the “Trip point selection” screen (See Section 3.2.4.1.1.2.3).
Pressing the “P” key will enter the Limit Configuration edit mode and pressing the “V/A” key will scroll through the modes available.

3.2.4.1.1.2.3 Trip Point Selection

This screen applies to the Trip Point Selection. This screen allows the user to set Trip point for the meter.



The allowable range for trip point selection can be referred from table 2
Enter value, prompt for first digit. (Blinking digit denotes that value will be changing).

Press the “V/A” key to scroll the values of the first digit. Press the “P” key to advance to next digit.



The first digit entered, prompt for second digit (Blinking digit denotes that valuewill be changing).Use the “V/A” key to scroll the value of the second digit.

Press the “P” key to advance to next digit.



The second digit entered, prompt for third digit (Blinking
digit denotes that value will be changing).
Use the “V/A” key to scroll the value of the third digit.



Entered the value for third digit.Press the “V/A” key to advance to next Screen “Hysteresis selection” (see section 3.2.4.1.1.2.4) Pressing the “V/A” key will return in edit mode.

3.2.4.1.1.2.4 Hysteresis selection

This screen applies to the Hysteresis selection.



This screen allows the user to set Hysteresis for relay output
The allowable range is 0.5% to 50 % of Trip point.
Enter value, prompt for first digit. (Blinking digit denotes that value will be changing
Press the “V/A” key to scroll the value of the first digit Press the “P” key to advance to next digit.
Hysteresis for Frequency is calculated as % of trip point span from 40Hz. e.g. If trip point is 50%(55Hz) and hysteresis is set to 10%, then relay will reset at 53.5Hz [10% of (55 - 40Hz) 15Hz is 1.5Hz. Hence, 55 -1.5= 53.5Hz

Note : In case of lo alarm if trip point is set at 100% then maximum 20% Hysterisis can be set.



The first digit entered, prompt for second digit Blinking digit denotes that value
will be changing).
Use the “V/A” key to scroll the value of the second digit.
Press the “P” key to advance to next digit



The second digit entered, prompt for third digit (Blinking digit denotes that value will be changing). Use the “V/A” key to scroll the value of the third digit.



Entered value for third digit. Press the “V/A” key to advance to next Screen Energizing delay time” (3.2.4.1.1.2.5).

3.2.4.1.1.2.5 Energizing Delay Time



This screen allows the user to set Energizing Delay Time in seconds for Relay Limit assigned parameters Pressing ”V/A” key advances to De-energizing delay screen.

Pressing the “P” key will enter the Energizing Delay edit mode and pressing the “V/A”key scroll the value through 1 to 10.

Pressing “P” key set displayed value & “V/A” key will advance to De-energizing Delay Time screen (See Section 3.2.4.1.1.2.6).

Pressing the “P” key will re-enter the Energizing delay edit mode.

3.2.4.1.1.2.6 De-Energizing Delay Time

This screen allows the user to set De-Energizing Delay time in seconds for Relay Limit Assigned Parameters .



Pressing “P” key accepts the present value and “V/A” key advance to Configuration of output. (See section 3.2.4.1) Pressing the “V/A” key will enter the “De-Energizing Delay” Edit mode and scroll the “Value” through 1 to10. Pressing “P” key set displayed value & will advance to Configuration of output. (See section 3.2.4.1)

4. Run Hour



This screen shows the total no. of hours the load was connected. Even if the auxiliary supply is interrupted count of Run hour will be maintained in internal memory & displayed in the format “hours.min”.

For example if displayed count is 105000.10 r-H it indicates 105000 hours & 10 minutes. After 999999.59 run hours display will restart from zero. To reset run hour manually see Section Resetting Parameter 3.2.3.1

5. On Hour



This screen shows the total no. of hours the auxiliary supply was “ON”. Even if the Auxiliary supply is interrupted count of On hour will be maintained in internal memory & displayed in the format “hours. min”.

For example if displayed count is 005000.10 On-H it indicates 005000 hours and 10 minutes. After 999999.59 On hours display will restart from zero. To reset On hour manually see Section Resetting Parameter 3.2.3.1

6. Number of Interruption



This screen displays the total no. of times the auxiliary supply was interrupted. Even if the auxiliary supply is interrupted count will be maintained in internal memory. To reset No of Interruption manually see Section Resetting Parameter 3.2.3.1

7. Negative Sign Indication

If the segment glows, it indicates negative sign of displayed parameter.



When Power factor lies in second and third quadrant, it has -'ve sign, so active power has -'ve sign as shown in the phaser diagram.

Also in 3rd & 4th quadrant, reactive power is -'ve. So the -'ve annunciator glows to indicate the operation of system in respective mode as per the Phasor diagram shown on page 48. For example in the screen shown, Input values were $240V_{L-N}$, 20A, and phase angle 187^0 hence the phase active power is displayed with -'ve sign.

TABLE 2 : Parameter for Limit Output

Parameter for Limit Relay								
No.	Parameter	3P4W	3P3W	1P2W	1P3W	Trip Point Range		100 % Value
						Hi-En or Hi-Den	Lo-En or Lo-Den	
0	None	✓	✓	✓	✓	-	-	-
1	Volts 1	✓	✓	✓	✓	10 - 120 %	10 - 100 %	Vnom (L-N)
2	Volts 2	✓	✓	×	✓	10 - 120 %	10 - 100 %	Vnom (L-N)
3	Volts 3	✓	✓	×	×	10 - 120 %	10 - 100 %	Vnom (L-N)
4	IL1	✓	✓	✓	✓	10 - 120 %	10 - 100 %	Inom
5	IL2	✓	✓	×	✓	10 - 120 %	10 - 100 %	Inom
6	IL3	✓	✓	×	×	10 - 120 %	10 - 100 %	Inom
7	W1	✓	×	✓	✓	10 - 120 %	10 - 100 %	Nom
8	W2	✓	×	×	✓	10 - 120 %	10 - 100 %	Nom
9	W3	✓	×	×	×	10 - 120 %	10 - 100 %	Nom

Table 2 Continued...

No.	Parameter	3P4W	3P3W	1P2W	1P3W	Trip Point Range		100 % Value
						Hi-En or Hi-DEn	Lo-En or Lo-DEn	
10	VA1	✓	×	✓	✓	10 - 120 %	10 - 100 %	Nom
11	VA2	✓	×	×	✓	10 - 120 %	10 - 100 %	Nom
12	VA3	✓	×	×	×	10 - 120 %	10 - 100 %	Nom
13	VAr1	✓	×	✓	✓	10 - 120 %	10 - 100 %	Nom
14	VAr2	✓	×	×	✓	10 - 120 %	10 - 100 %	Nom
15	VAr3	✓	×	×	×	10 - 120 %	10 - 100 %	Nom
16	PF1	✓	×	✓	✓	10 - 90 %	10 - 90 %	90 degree
17	PF2	✓	×	×	✓	10 - 90 %	10 - 90 %	90 degree
18	PF3	✓	×	×	×	10 - 90 %	10 - 90 %	90 degree
19	PA1	✓	×	✓	✓	10 - 90 %	10 - 90 %	360 degree
20	PA2	✓	×	×	✓	10 - 90 %	10 - 90 %	360 degree
21	PA3	✓	×	×	×	10 - 90 %	10 - 90 %	360 degree
22	Volts Ave.	✓	✓	×	✓	10 - 120 %	10 - 100 %	Vnom
24	Current Ave.	✓	✓	×	✓	10 - 120 %	10 - 100 %	Inom
27	Watts sum	✓	✓	×	✓	10 - 120 %	10 - 100 %	Nom
29	VA sum	✓	✓	×	✓	10 - 120 %	10 - 100 %	Nom
31	VAr sum	✓	✓	×	✓	10 - 120 %	10 - 100 %	Nom
32	PF Ave.	✓	✓	×	✓	10 - 90 %	10 - 90 %	90 degree
34	PA Ave.	✓	✓	×	✓	10 - 90 %	10 - 90 %	360 degree
36	Freq.	✓	✓	✓	✓	10 - 90 %	10 - 90 %	66 Hz
42	Watt Demand Imp.	✓	✓	✓	✓	10 - 120 %	10 - 100 %	Nom
43	Watt Max Demand Imp.	✓	✓	✓	✓	10 - 120 %	10 - 100 %	Nom
44	Watt Demand Exp	✓	✓	✓	✓	10 - 120 %	10 - 100 %	Nom
45	Watt Demand Max Exp	✓	✓	✓	✓	10 - 120 %	10 - 100 %	Nom
50	VA Demand	✓	✓	✓	✓	10 - 120 %	10 - 100 %	Nom
51	VA Max Demand.	✓	✓	✓	✓	10 - 120 %	10 - 100 %	Nom
52	Current Demand.	✓	✓	✓	✓	10 - 120 %	10 - 100 %	Inom
53	Current Max Demand.	✓	✓	✓	✓	10 - 120 %	10 - 100 %	Inom
101	VL1-L2	✓	×	×	✓	10 - 120 %	10 - 100 %	Vnom (L-L)
102	VL2-L3	✓	×	×	×	10 - 120 %	10 - 100 %	Vnom (L-L)
103	VL3-L1	✓	×	×	×	10 - 120 %	10 - 100 %	Vnom (L-L)

Note : Parameters 1,2,3 are L-N Voltage for 3P4W,1P3W,1P2W & L-L Voltage for 3P3W.

(1) For Frequency 0% corresponds to 40Hz and 100% corresponds to 70Hz.
(2) For 3P4W , 1P3W and 1P2W the nominal value is V_{L-N} and that for 3P3W is V_{L-L}.
(3) Nominal value for power is calculated from nominal Voltage and current values.
(4) Nominal value is to be considered with set CT/ PT Primary values.
(5) For single phase L1 phase values are to be considered as system values.

8. Relay output (Optional)

The Multifunction Meter is provided with relay for pulse output as well as for limit switch.

8.1 Pulse Output

Pulse output is the potential free, very fast acting relay contact which can be used to drive an external mechanical counter for energy measurement.The multifunction meter pulse output can be configured to any of the following parameter through setup parameter screen.

1) Active Energy (Import) 2) Active Energy (Export)
3) Reactive Energy (Inductive) 4) Reactive Energy (capacitive)
5) Apparent Energy

TABLE 3 : Energy Pulse Rate Divisor

1. For Energy Output in KWhr

Pulse rate		
Divisor	Pulse	System Power*
1	1 per kWhr	Upto 3600kW
	1 per MWhr	Upto 30000kW

2. For Energy Output in Whr

	Pulse rate	
Divisor	Pulse	System Power*
1	1per Whr	Upto 3600W
	1per kWhr	Upto 3600kW
	1per MWhr	Upto 30000kW
10	1per 10Whr	Upto 3600W
	1per 10kWhr	Upto 3600kW
	1per 10MWhr	Upto 30000kW
100	1per 100Whr	Upto 3600W
	1per 100kWhr	Upto 3600kW
	1per 100MWhr	Upto 30000kW
1000	1 per 1000Whr	Upto 3600kW
	1 per 1000kWhr	Upto 3600kW
	1per 1000MWhr	Upto 30000kW
Pulse Duration 60 ms,100 ms or 200 ms		

3. For Energy Output in MWhr

Pulse rate	
Divisor	Pulse
1	1per MWhr

Above options are also applicable for Apparent and Reactive Energy.

*Note:
1) System Power = 3 x CT (Primary) x PT (Primary) L-N for 3 Phase 4 Wire.
2) System Power = (Root3) x CT(Primary) x PT (Primary) L-L for 3 Phase 3 Wire.
3) System Power = CT (Primary) x PT (Primary) L-N for 1 Phase 2 Wire.
4) System Power = 2 X CT (Primary) x PT (Primary) L-N for 1 Phase 3 Wire.

8.2 Limit Switch

Limit switch can be used to monitor the measured parameter (Ref.Table:2)in relation with to a set limit. The limit switch can be configured in one of the four mode given below:-

1) Hi alarm & Energized Relay..
2) Hi alarm & De-Energized Relay.
3) Lo alarm & Energized Relay.
4) Lo alarm & De-Energized Relay.

With User selectable Trip point, Hysteresis, Energizing Delay & De-Energizing delay.

Hi Alarm

If Hi-Alarm Energized or Hi Alarm De-Energized option is selected then relay will get Energized or De-energized,if selected parameter is greater than or equal to trip point.

Lo Alarm

If Lo-Alarm Energized or Lo Alarm De-Energized option is selected then relay will get Energized or De-energized, if selected parameter is less than or equal to trip point.

 # Note: For Lo-Alarm configuration, set the values of trip point & Hysteresis such that % trip point + % of Hysteresis should be less than 100%.
For example, if trip point is set 70% then maximum applicable Hysteresis is 42.8%. i.e Trip point 70% (252°) + Hysteres is 42.8% (107.8°) = 359.8°
If total value is greater than the 100% i.e. 360° then relay will not release.

Trip point

Trip point can be set in the range as specified in table 2 of nominal value.

Hysteresis

Hysteresis can be set in the range of 0.5% to 50 % of set trip point .
If Hi-alarm Energized or Hi-alarm De-energized is selected then relay will get De-energized or Energized respectively, if set parameter value is less than Hysteresis
Similarly if Lo-alarm Energized or Lo-alarm De-Energized.

Note : In case of low alarm if trip point is set greater than 80% then the maximum hysteresis can be set such that the total Trip point+ Hysteresis(% of trip point value) will not exceed 120% of range.
For example :If trip point is set at 90%, then maximum 33.3% hysteresis should be set such that, [90 + 29.99 (33.3% of 90)] = 120

Energizing Delay

The energizing delay can be set in the range from 1 to 10 sec.

De-Energizing Delay

The De-energizing delay can be set in the range from1 to 10 sec.

Example of Different Configuration

Parameter No. 4 (Current1)
Trip Point = 50%
Hysteresis = 50% of trip point
Energising Delay:2S
De-energising Delay:2S

Example for Phase angle :

If trip point is set 70% then maximum applicable hysteresis is 42.8% i.e. Trip point 70% (252 degree) + Hysteresis 42.8% (107.8 degree) = 359.8 degree. If total value is greater than the 100% i.e. 360 degree then relay will not release.
Example for PF :
For alarm - High & Relay - Energized combination, If trip point is 70% & hysteresis is 30% then trip value = 0.7x90 degree = 63 degree
Tripping PF = cos(63)=0.4539 & hysteresis = 0.3x0.4539=0.136.
Hence, the relay will energize above 0.4539 and de-energize below 0.3179.

Note:
This function will work irrespective of +/- sign. It depends only on value.

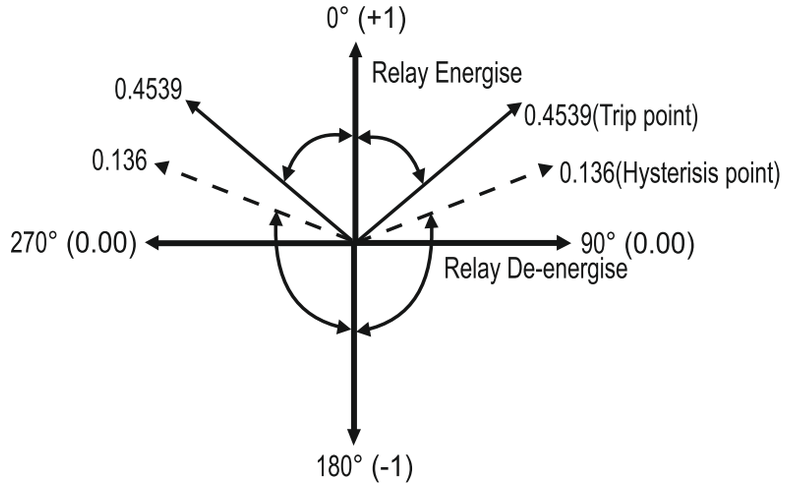

1) Hi alarm & Energised relay

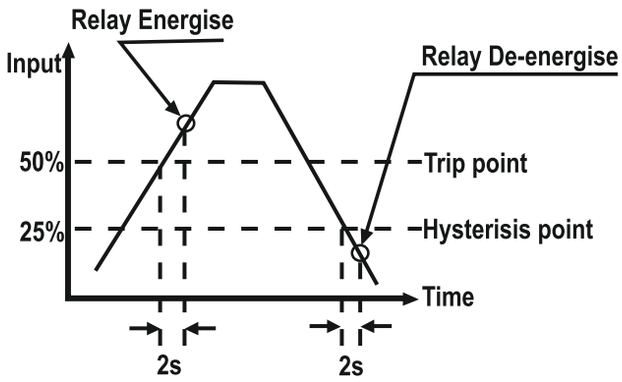

2) Hi alarm & De-energise relay

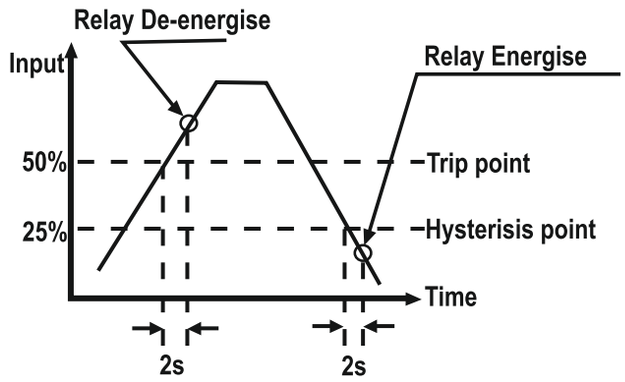

3) Lo alarm & Energised relay

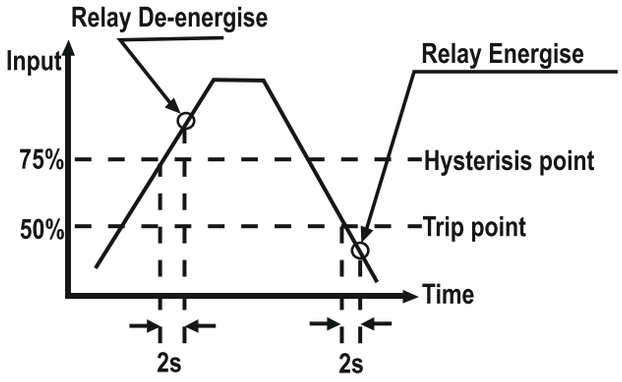

4) Lo alarm & De-energise relay

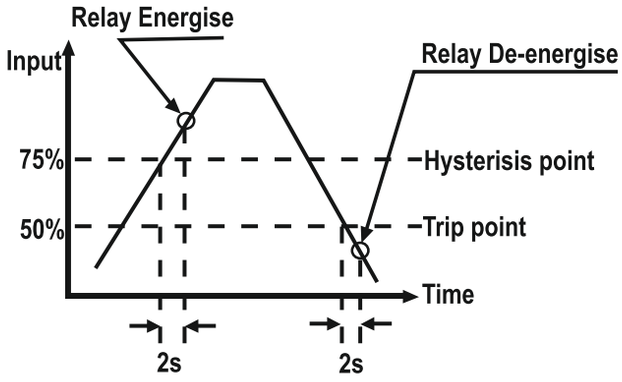

9. RS 485 (ModBus) Output

The multifunction meter supports MODBUS (RS485) RTU protocol (2-wire) .

Connection should be made using twisted pair shielded cable. All "A" and "B" connections are daisy chained together. The screens should also be connected to the “Gnd” terminal. To avoid the possibility of loop currents, an Earth connection should be made at one point on the network. Loop (ring) topology does not require any termination load. Line topology may or may not require terminating loads depending on the type and length of cable used. The impedance of the termination load should match the impedance of the cable and be at both ends of the line. The cable should be terminated at each end with a 120 ohm (1/4 Watt min.) resistor.

RS 485 network supports maximum length of 1.2km. Including the Master, a maximum of 32 instruments can be connected in RS485 network. The permissible address range for the multifunction meter is between 1 and 247 for 32 instruments. Broadcast Mode (address 0) is not allowed.

The maximum latency time of an multifunction meter is 200ms i.e. this is the amount of time that can pass before the first response character is output.

After sending any query through software (Master), it must allow 200ms of time to elapse before assuming that the multifunction meter is not going to respond. If slave does not respond within 200 ms, master can ignore the previous query and can issue fresh query to the slave.

The each byte in RTU mode has following format:

	8-bit binary, hexadecimal 0-9, A-F 2 hexadecimal characters contained in each 8-bit field of the message
Format of Data Bytes	4 bytes (32 bits) per parameter. Floating point format (to IEEE 754) Most significant byte first (Alternative least significant byte first)
Error Checking Bytes	2 byte Cyclical Redundancy Check (CRC)
Byte format	1 start bit, 8 data bits, least significant bit sent first 1 bit for even/odd parity 1 stop bit if parity is used; 1 or 2 bits if no parity

Communication Baud Rate is user selectable from the front panel between 2400,4800,9600,19200,38400,57600 bps.

Function code :

03	Read Holding Registers	Read content of read /write location (4X)
04	Read input Registers	Read content of read only location (3X)
16	Presets Multiple Registers	Set the content of read / write locations (4X)

Exception Cases : An exception code will be generated when meter receives ModBus query with valid parity & error check but which contains some other error (e.g. Attempt to set floating point variable to an invalid value) The response generated will be “Function code” Red with HEX (80H). The exception codes are listed below.

01	Illegal function	The function code is not supported by Meter
02	Illegal Data Address	Attempt to access an invalid address or an attempt to read or write part of a floating point value
03	Illegal Data Value	Attempt to set a floating point variable to an invalid value

Accessing 3 X register for reading measured values

Two consecutive 16 bit registers represent one parameter. Refer table 4 for the addresses of 3X registers (Parameters measured by the instruments). Each parameter is held in the 3X registers. Modbus Code 04 is used to access all parameters.

Example :

To read parameter ,

Volts 3 : Start address= 04 (Hex) Number of registers = 02

Note : Number of registers = Number of parameters x 2

Each Query for reading the data must be restricted to 20 parameters or less. Exceeding the 20 parameter limit will cause a ModBus exception code to be returned.

Query :

01 (Hex)	04 (Hex)	00 (Hex)	04(Hex)	00 (Hex)	02(Hex)	30 (Hex)	0A (Hex)
Device Address	Function Code	Start Address High	Start Address Low	Number of Registers Hi	Number of Registers Lo	CRC Low	CRC High

Start Address High : Most significant 8 bits of starting address of the parameter requested.
Start Address low :Least significant 8 bits of starting address of the parameter requested.
Number of register Hi : Most significant 8 bits of number of registers requested.
Number of register Lo : Least significant 8 bits of number of registers requested.
(Note : Two consecutive 16 bit register represent one parameter.)

Response: Volt3 (219.25V)

01 (Hex)	04 (Hex)	04 (Hex)	43 (Hex)	5B (Hex)	41 (Hex)	21 (Hex)	6F (Hex)	9B (Hex)
Device Address	Function Code	Byte Count	Data Register1 High Byte	Data Register1 Low Byte	Data Register2 High Byte	Data Register2 Low Byte	CRC Low	CRC High

Byte Count : Total number of data bytes received.
Data register 1 High Byte : Most significant 8 bits of data register 1 of the parameter requested.
Data register 1 Low Byte : Least significant 8 bits of data register 1 of the parameter requested.
Data register 2 High Byte : Most significant 8 bits of data register 2 of the parameter requested.
Data register 2 Low Byte : Least significant 8 bits of data register 2 of the parameter requested.
(Note : Two consecutive 16 bit register represent one parameter.)

Table 4 : 3 X Register Addresses (Measured Parameters)

Modbus 3X Add.	Modbus 4X Add.	Read only parameter value	3P4W	3P3W	1P3W	1P2W
30001	40001	V1	✓	✓	✓	✓
30003	40003	V2	✓	✓	✓	×
30005	40005	V3	✓	✓	×	×
30007	40007	I1	✓	✓	✓	✓
30009	40009	I2	✓	✓	✓	×
30011	40011	I3	✓	✓	×	×
30013	40013	W1	✓	×	✓	✓
30015	40015	W2	✓	×	✓	×
30017	40017	W3	✓	×	×	×

Table 4 Continued.....

Modbus 3X Add.	Modbus 4X Add.	Read only parameter value	3P4W	3P3W	1P3W	1P2W
30019	40019	VA1	✓	×	✓	✓
30021	40021	VA2	✓	×	✓	×
30023	40023	VA3	✓	×	×	×
30025	40025	VAR1	✓	×	✓	✓
30027	40027	VAR2	✓	×	✓	×
30029	40029	VAR3	✓	×	×	×
30031	40031	PF1	✓	×	✓	✓
30033	40033	PF2	✓	×	✓	×
30035	40035	PF3	✓	×	×	×
30037	40037	Angle1	✓	×	✓	✓
30039	40039	Angle2	✓	×	✓	×
30041	40041	Angle3	✓	×	×	×
30043	40043	Volt Avg	✓	✓	✓	×
30045	40045	Volt Sum	✓	✓	✓	×
30047	40047	Current Avg	✓	✓	✓	×
30049	40049	Current Sum	✓	✓	✓	×
30051	40051	Watt Avg	✓	✓	✓	×
30053	40053	Watt Sum	✓	✓	✓	×
30055	40055	VA Avg	✓	✓	✓	×
30057	40057	VA Sum	✓	✓	✓	×
30059	40059	VAR Avg	✓	✓	✓	×
30061	40061	VAR Sum	✓	✓	✓	×
30063	40063	PF Avg	✓	✓	✓	×
30065	40065	PF Sum	✓	×	✓	×
30067	40067	Phase Angle Avg	✓	✓	✓	×
30069	40069	Phase Angle Sum	✓	✓	✓	×
30071	40071	System Frequency	✓	✓	✓	✓
30073	40073	Wh Import	✓	✓	✓	✓
30075	40075	Wh Export	✓	✓	✓	✓
30077	40077	VARh Inductive	✓	✓	✓	✓
30079	40079	VARh Capacitive	✓	✓	✓	✓
30081	40081	VAh	✓	✓	✓	✓
30083	40083	kW Import Demand	✓	✓	✓	✓
30085	40085	Max kW Import Demand	✓	✓	✓	✓
30087	40087	kW Export Demand	✓	✓	✓	✓

Table 4 Continued.....

Modbus 3X Add.	Modbus 4X Add.	Read only parameter value	3P4W	3P3W	1P3W	1P2W
30089	40089	Max kW Exp Demand	✓	✓	✓	✓
30099	40099	KVA Demand	✓	✓	✓	✓
30101	40101	Max KVA Demand	✓	✓	✓	✓
30103	40103	Current Demand	✓	✓	✓	✓
30105	40105	Max Current Demand	✓	✓	✓	✓
30117	40117	Wh Import Overflow count	✓	✓	✓	✓
30121	40121	Wh Export Overflow count	✓	✓	✓	✓
30125	40125	VARh Inductive Overflow count	✓	✓	✓	✓
30129	40129	VARh Capacitive Overflow count	✓	✓	✓	✓
30133	40133	VAh Overflow count	✓	✓	✓	✓
30137	40137	System Voltage Max	✓	✓	✓	✓
30139	40139	System Voltage Min	✓	✓	✓	✓
30141	40141	System RPM	✓	✓	✓	✓
30143	40143	Impulse Rate	✓	✓	✓	✓
30145	40145	System Current Max	✓	✓	✓	✓
30147	40147	System Current Min	✓	✓	✓	✓
30149	40149	Wh Import depending on update rate	✓	✓	✓	✓
30151	40151	Wh Export depending on update rate	✓	✓	✓	✓
30153	40153	VARh Inductive depending on update rate	✓	✓	✓	✓
30155	40155	VARh Capacitive depending on update rate	✓	✓	✓	✓
30157	40157	VAh depending on update rate	✓	✓	✓	✓
30161	40161	Wh Imp OFC depending on update rate	✓	✓	✓	✓
30163	40163	Wh Exp OFC depending on update rate	✓	✓	✓	✓
30165	40165	VARh Inductive OFC depending on update rate	✓	✓	✓	✓
30167	40167	VARh Capacitve OFC depending on update rate	✓	✓	✓	✓
30169	40169	VAh OFC depending on update rate	✓	✓	✓	✓
30201	40201	V12	✓	✓	✓	×
30203	40203	V23	✓	✓	×	×
30205	40205	V31	✓	✓	×	×
30207	40207	VTHD-R	✓	✓	✓	✓
30209	40209	VTHD-Y	✓	✓	✓	×
30211	40211	VTHD-B	✓	✓	×	×
30213	40213	ITHD-R	✓	✓	✓	✓
30215	40215	ITHD-Y	✓	✓	✓	×
30217	40217	ITHD-B	✓	✓	×	×

Table 4 Continued.....

Modbus 3X Add.	Modbus 4X Add.	Read only parameter value	3P4W	3P3W	1P3W	1P2W
30219	40219	System V-THD	✓	✓	✓	✓
30221	40221	System I-THD	✓	✓	✓	✓
30225	40225	Neutral Current	✓	×	✓	×
30227	40227	Run hour	✓	✓	✓	✓
30229	40229	On Hour	✓	✓	✓	✓
30231	40231	No. of Interrupts	✓	✓	✓	✓
30263	40263	Relay 1 Status	✓	✓	✓	✓
30501	40501	Sys kW Imp Demand	✓	✓	✓	✓
30503	40503	Sys kW Exp Demand	✓	✓	✓	✓
30509	40509	Sys KVA Demand	✓	✓	✓	✓
30511	40511	Sys Current Demand	✓	✓	✓	✓
30513	40513	Sys kW Imp Max Demand	✓	✓	✓	✓
30515	40515	Sys kW Exp Max Demand	✓	✓	✓	✓
30521	40521	Sys KVA Max Demand	✓	✓	✓	✓
30523	40523	Sys Current Max Demand	✓	✓	✓	✓
31301	41301	Max Voltage L1	✓	×	✓	×
31303	41303	Max Voltage L2	✓	×	✓	×
31305	41305	Max Voltage L3	✓	×	×	×
31307	41307	Min Voltage L1	✓	×	✓	×
31309	41309	Min Voltage L2	✓	×	✓	×
31311	41311	Min Voltage L3	✓	×	×	×
31313	41313	Max Voltage L12	✓	✓	✓	×
31315	41315	Max Voltage L23	✓	✓	×	×
31317	41317	Max Voltage L31	✓	✓	×	×
31319	41319	Min Voltage L12	✓	✓	✓	×
31321	41321	Min Voltage L23	✓	✓	×	×
31323	41323	Min Voltage L31	✓	✓	×	×
31325	41325	System Max Voltage	✓	✓	✓	✓
31327	41327	System Min Voltage	✓	✓	✓	✓
31333	41333	Max Current L1	✓	✓	✓	×
31335	41335	Max Current L2	✓	✓	✓	×
31337	41337	Max Current L3	✓	✓	×	×
31339	41339	Min Current L1	✓	✓	✓	×
31341	41341	Min Current L2	✓	✓	✓	×

Table 4 Continued.....

Modbus 3X Add.	Modbus 4X Add.	Read only parameter value	3P4W	3P3W	1P3W	1P2W
31343	41343	Min Current L3	✓	✓	×	×
31345	41345	System Max Current	✓	✓	✓	✓
31347	41347	System Min Current	✓	✓	✓	✓
31349	41349	Max W1	✓	×	✓	×
31351	41351	Max W2	✓	×	✓	×
31353	41353	Max W3	✓	×	×	×
31355	41355	Min W1	✓	×	✓	×
31357	41357	Min W2	✓	×	✓	×
31359	41359	Min W3	✓	×	×	×
31361	41361	Max Sys W	✓	✓	✓	✓
31363	41363	Min Sys W	✓	✓	✓	✓
31365	41365	Max VAr1	✓	×	✓	×
31367	41367	Max VAr2	✓	×	✓	×
31369	41369	Max VAr3	✓	×	×	×
31371	41371	Min VAr1	✓	×	✓	×
31373	41373	Min VAr2	✓	×	✓	×
31375	41375	Min VAr3	✓	×	×	×
31377	41377	Max SysVAr	✓	✓	✓	✓
31379	41379	Min Sys VAr	✓	✓	✓	✓
31381	41381	Max VA1	✓	×	✓	×
31383	41383	Max VA2	✓	×	✓	×
31385	41385	Max VA3	✓	×	×	×
31387	41387	Min VA1	✓	×	✓	×
31389	41389	Min VA2	✓	×	✓	×
31391	41391	Min VA3	✓	×	×	×
31393	41393	Max Sys VA	✓	✓	✓	✓
31395	41395	Min Sys VA	✓	✓	✓	✓
31397	41397	Max PF1	✓	×	✓	×
31399	41399	Max PF2	✓	×	✓	×
31401	41401	Max PF3	✓	×	×	×
31403	41403	Min PF1	✓	×	✓	×
31405	41405	Min PF2	✓	×	✓	×
31407	41407	Min PF3	✓	×	×	×
31409	41409	Max SysPF	✓	✓	✓	✓
31411	41411	Min Sys PF	✓	✓	✓	✓

Modbus 3X Add.	Modbus 4X Add.	Read only parameter value	3P4W	3P3W	1P3W	1P2W
31413	41413	Max neutral Current	✓	×	✓	×
31415	41415	Max PA1	✓	×	✓	✓
31417	41417	Max PA2	✓	×	✓	×
31419	41419	Max PA3	✓	×	×	×
31421	41421	Min PA1	✓	×	✓	✓
31423	41423	Min PA2	✓	×	✓	×
31425	41425	Min PA3	✓	×	×	×
31427	41427	Max SysPA	✓	✓	✓	✓
31429	41429	Min Sys PA	✓	✓	✓	✓
31431	41431	Max Sys Freq	✓	✓	✓	✓
31433	41433	Min Sys Freq	✓	✓	✓	✓

Note : Parameters 1, 2, 3 are L-N Voltage for 3P4W, 1P3W, 1P2W and L-L Voltage for 3P3W.

Accessing 3X and 4 X register for Long Energies Reading

Modbus 3X Add.	Modbus 4X Add.	Read only parameter value	3P4W	3P3W	1P3W	1P2W
30801	40801	Wh Import	✓	✓	✓	✓
30803	40803	Wh Export	✓	✓	✓	✓
30805	40805	VARh Import	✓	✓	✓	✓
30807	40807	VARh Export	✓	✓	✓	✓
30809	40809	VAh	✓	✓	✓	✓
30811	40811	Wh Import OVF Count	✓	✓	✓	✓
30813	40813	Wh Export OVF Count	✓	✓	✓	✓
30815	40815	VARh Import OVF Count	✓	✓	✓	✓
30817	40817	VARh Export OVF Count	✓	✓	✓	✓
30819	40819	VAh OVF Count	✓	✓	✓	✓
30821	40821	Wh Import on Update Rate	✓	✓	✓	✓
30823	40823	Wh Export on Update Rate	✓	✓	✓	✓
30825	40825	VARh Import on Update Rate	✓	✓	✓	✓
30827	40827	VARh Export on Update Rate	✓	✓	✓	✓
30829	40829	VAh on Update Rate	✓	✓	✓	✓
30831	40831	Wh Imp OVF Count on Update Rate	✓	✓	✓	✓
30833	40833	Wh Exp OVF Count on Update Rate	✓	✓	✓	✓
30835	40835	VARh Imp OVF Count on Update Rate	✓	✓	✓	✓
30837	40837	VARh Exp OVF Count on Update Rate	✓	✓	✓	✓

30839	40839	VAH OVF Count on Update Rate	✓	✓	✓	✓
30849	40849	Run Hour	✓	✓	✓	✓
30851	40851	On Hour	✓	✓	✓	✓
30853	40853	No of Interrupts	✓	✓	✓	✓

Accessing 4 X register for Reading & Writing

Each setting is held in the 4X registers. ModBus code 03 is used to read the current setting & code 16 is used to write/change the setting. Refer **Table 5** for 4 X Register addresses.

Example : Reading System type
System type : Start address= 0x1772 (Hex)
Number of registers = 02
Note :Number of registers = Number of parameters x 2

Query

Device Address	01 (Hex)
Function Code	03 (Hex)
Start Address High	17 (Hex)
Start Address Low	72 (Hex)
Number of Registers Hi	00 (Hex)
Number of Registers Lo	02 (Hex)
CRC Low	EE (Hex)
CRC High	27 (Hex)

Start Address High : Most significant 8 bits of starting address of the parameter requested.
Start Address low : Least significant 8 bits of starting address of the parameter requested.
Number of register Hi : Most significant 8 bits of Number of registers requested.
Number of register Lo : Least significant 8 bits of Number of registers requested.
(Note : Two consecutive 16 bit register represent one parameter.)

Response: System Type (3 phase 4 wire = 3)

Device Address	01 (Hex)
Function Code	03 (Hex)
Byte Count	04 (Hex)
Data Register1 High Byte	40 (Hex)
Data Register1Low Byte	40 (Hex)
Data Register2 High Byte	00 (Hex)
Data Register2 Low Byte	00(Hex)
CRC Low	EE (Hex)
CRC High	27 (Hex)

Byte Count : Total number of data bytes received.
Data register 1 High Byte : Most significant 8 bits of Data register 1 of the parameter requested.
Data register 1 Low Byte : Least significant 8 bits of Data register 1 of the parameter requested.
Data register 2 High Byte : Most significant 8 bits of Data register 2 of the parameter requested.
Data register 2 Low Byte : Least significant 8 bits of Data register 2 of the parameter requested.
(Note : Two consecutive 16 bit register represent one parameter.)

Example : Writing System type

System type : Start address= 0x1772 (Hex)
Number of registers = 02

Query:(Change System type to 3P3W = 2)

Device Address	01 (Hex)
Function Code	10 (Hex)
Starting Address Hi	17 (Hex)
Starting Address Lo	72 (Hex)
Number of Registers Hi	00 (Hex)
Number of Registers Lo	02(Hex)
Byte Count	04 (Hex)
Data Register-1High Byte	40 (Hex)
Data Register-1 Low Byte	00(Hex)
Data Register-2 High Byte	00(Hex)
Data Register-2 Low Byte	00(Hex)
CRC Low	66 (Hex)
CRC High	10 (Hex)

Byte Count : Total number of data bytes received.
Data register 1 high byte : Most significant 8 bits of data register 1 of the parameter requested.
Data register 1 low byte : Least significant 8 bits of data register 1 of the parameter requested.
Data register 2 high byte : Most significant 8 bits of data register 2 of the parameter requested.
Data register 2 Low Byte : Least significant 8 bits of data register 2 of the parameter requested.
(Note : Two consecutive 16 bit register represent one parameter.)

Response:

Device Address	01 (Hex)
Function Code	10 (Hex)
Start Address High	17 (Hex)
Start Address Low	72 (Hex)
Number of Registers Hi	00 (Hex)
Number of Registers Lo	02 (Hex)
CRC Low	61 (Hex)
CRC High	CA (Hex)

Start address high : Most significant 8 bits of starting address of the parameter requested.
Start address low : Least significant 8 bits of starting address of the parameter requested.
Number of register hi : Most significant 8 bits of number of registers requested.
Number of register lo : Least significant 8 bits of number of registers requested.
(Note : Two consecutive 16 bit register represent one parameter.)

Table 5 : 4 X register addresses

Address	Description	Default Values	Setting Range
46003	System Type	3	1:1P2W, 2:3P3W, 3:3P4W, 4:1P3W
46005	PT Primary	415	100 to 1200KVLL
46007	CT Primary	5	1 to 9999
46009	PT Secondary	415	100 to 500 VLL
46011	CT Secondary	5	1 or 5
46015	Demand Time	8	1 to 60 seconds
46017	Modbus Energy Unit	2	1 for Wh, 2 for kWh, 3 for MWh
46019	Energy Digit Reset Count	8	7, 8, 9 Digits
46021	Update Rate	1	1 to 60 minutes
46023	Impulse on Energy Selection	1	0 to 5
46025	Energy Impulse Rate	1000	Read only
46031	Reset Parameters	0	0 to 7
46033	Password	0000	0000 to 9999
46035	Factory Reset	0	5555
46039	No Of Poles	2	2 to 40 (multiples of 2 only)

46041	Autoscroll	0	0 or 1
46043	Noise Cutoff	0	0mA or 30mA
46045	Comsetup	8	0 to 23
46047	Modbus Address	1	1 to 247
46049	Register Order	0	2141
46051	Pulse Width	100	60ms, 100ms, 200ms
46053	Pulse Divisor	1	1, 10, 100, 1000
46055	Relay 1 Out Select	0	0 for NONE, 1 For Pulse and 2 for Limit
46057	Pulse Limit 1 Para Select	0	See table 2
46059	Limit 1 Conf Sel	0	0:Hi-En, 1:Hi-DEn, 2:Lo-En, 3:Lo-DEn
46061	Limit 1 Trip Point	100	See Table 2
46063	Limit 1 Hys	50	0 to 50%
46065	Limit 1 On Delay	1	1 to 10
46067	Limit 1 Off Delay	1	1 to 10
46085	Version No.	1.01	Read only

Explanation for 4 X register

Address	Parameters	Description
46003	System Type	This address is used to set the System Type. Write one of the following value to this address. 1 =1 Phase 2 Wire 4=1 Phase 3 Wire 2 = 3 Phase 3 Wire 3 = 3 Phase 4 Wire Writing any other value will return error.
46005	Pt Primary	This address allows the user to set PT Primary value. The maximum settable value is 1200kVL-L for all System Types & also depends on the per phase 1000MVA restriction of power combined with CT primary

46007	CT Primary	This address allows the user to set CT Primary value. The maximum settable value is 9999 & also depends on the per phase 1000MVA Restriction of power combined with PT primary.
46009	PT Secondary	This address is used to read and write the PT secondary value. For the range of PT secondary settable values refer Section 3.2.1.3.
46011	CT Secondary	This address is used to read and write the CT secondary value. Write one of the following values to this address: 1= 1A CT Secondary 5= 5A CT Secondary Writing any other value will return an error.
46015	Demand Time	Demand period represents demand time in minutes. The applicable values are 1 to 60. Writing any other value will return an error.
46017	Modbus Energy Unit	1: Energy in Wh; 2: Energy in kWh; 3: Energy in MWh.
46019	Energy Digit Reset Count	This address is used to set maximum energy count after which energy on modbus will roll over to zero. Valid values are 7, 8 and 9.
46021	Energy Update Rate	This address is used to specify update rate of energy in corresponding 3X registers. The valid values for update rate are from 1 to 60 min.
46023	Impulse on Energy Selection	This address is used to select the energy to which impulse is to be assigned. Writing any other value will return an error. To assign the value refer TABLE 9.
46025	Energy Impulse Rate	This address allows the user to read the impulse rate which is calculated depending on the nominal system power.
46031	Reset Parameters	The following screens allow the users to reset the all 1.Energy, 2. Demand, 3. Lo (Min), 4. Hi (Max), 5. Run hour & On hour, 6. No.of Interrupts, 7. Reset all.
46033	Password	This address is used to set & reset the password. Valid Range of Password can be set is 0000 - 9999 . 1) If password lock is present & if this location is read it will return zero. 2) If Password lock is absent & if this location is read it will return one. 3) If password lock is present & to disable this lock first send valid password to this location then write “0000” to this location. 4) If password lock is present & to modify 4X parameter first send valid password to this location so that 4X parameter will be accessible for modification. 5) If for in any of the above case invalid password is send then meter will return exceptional error 2.

46035	Factory Reset	Sending 5555 to this address will Reset meter to factory defaults.
46039	No Of Poles	To set No. of poles of a Generator of which RPM is to be measured and to which the instrument is connected to monitor its parameters. Setting range is 2 to 40 (Multiples of 2 only).
46041	Autoscroll	This address is used to activate or de-activate the auto scrolling. Write 0-Deactivate, 1-Activate. Writing any other value will return an error.
46043	Noise Cutoff	This address is used to set the noise current cutoff. The valid values are 0 or 30(mA).
46045	Comsetup	This address is used to set the Baudrate, Parity, Number of Stop Bits. Refer to Table 6 for details.
46047	Modbus Address	This register address is used to set Device address between 1 to 247 .
46049	Word Order	Word Order controls the order in which Multifunction Meter receives or sends floating - point numbers:- normal or reversed register order . In normal mode, the two registers that make up a floating point numbers are sent most significant bytes first. In reversed register mode , the two registers that make up a floating point numbers are sent least significant bytes first. To set the mode, write the value ' 2141.0' into this register-the instrument will detect the order used to send this value and set that order for all ModBus transaction involving floating point numbers.
46051	Pulse Width	This address is used to set pulse width of the Pulse output. Write one of the following values to this address: 60 : 60 ms, 100 : 100 ms, 200 : 200 ms. Writing any other value will return error .
46053	Pulse Divisor	This address is used to set pulse divisor of the Pulse output. Write one of the following values to this address for Wh: 1 : Divisor 1, 10 : Divisor 10, 100 : Divisor 100, 1000 : Divisor 1000 & In KWH or MWh divisior will be 1 default. Writing any other value will return an error.
46055	Relay 1 Out Select	This address is used to select the Relay operation as Pulse or Limit. Write one of the following values to this address. 0=None, 1= Pulse output on Relay, 2= Limit output on Relay. Writing any other value will return an error

46057	Pulse Limit 1 Para Sel	This address is used to assign the Parameter to Relay. If Limit option is selected refer Table 2 for parameter number & if Pulse option is selected then refer Table 7.
46059	Limit 1 Conf Sel	This address is used to set the Configuration for relay. See table 8. Writting any other value will return an error.
46061	Limit 1 Trip Point	This address is used to set the trip point in %. The values can be referred from Table 2. Writing any other value will return an error.
46063	Limit 1 hysteresis	This address is used to set the hysteresis between 0.5% to 50%. Writing any other value will return an error.
46065	Limit 1 On Delay	This address is used to set the Energizing delay between 1 to 10. Writing any other value will return an error.
46067	Limit 1 Off Delay	This address is used to set the De-Energizing delay between 1 to 10. Writing any other value will return an error.
46085	Version No.	This Address shows the firmware version of device.

Table 6: RS 485 Set-up Code

Baud Rate	Parity	Stop bit	Decimal Value
2400	NONE	1	0
2400	NONE	2	1
2400	EVEN	1	2
2400	ODD	1	3
4800	NONE	1	4
4800	NONE	2	5
4800	EVEN	1	6
4800	ODD	1	7
9600	NONE	1	8
9600	NONE	2	9
9600	EVEN	1	10
9600	ODD	1	11
19200	NONE	1	12
19200	NONE	2	13
19200	EVEN	1	14
19200	ODD	1	15
38400	NONE	1	16
38400	NONE	2	17
38400	EVEN	1	18
38400	ODD	1	19
57600	NONE	1	20
57600	NONE	2	21
57600	EVEN	1	22
57600	ODD	1	23

NOTE : Codes not listed in the table above may give rise to unpredictable results including loss of communication. Exercise caution when attempting to change mode via direct Modbus writes.

Table 7: Pulse Configuration Select

Pulse Relay	
0	None
1	System VAh
2	System Wh Import
3	System Wh Export
4	System VArh Import
5	System VArh Export

Table 8: Limit Configuration Select

Code	Configuration
0	Hi- alarm & Energized relay
1	Hi- alarm & De-energized relay
2	Lo- alarm & Energized relay
3	Lo- alarm & De-energized relay

Table 9: Energy Impulse Select

Code	Configuration
0	None
1	System Import Active Energy
2	System Export Active Energy
3	System Import Reactive Energy
4	System Export Reactive Energy
5	System Apparent Energy

9.1 User Assignable Modbus Registers

The Multifunction Meter contains the 20 user assignable registers in the address range of 0x1450 (35201) to 0x1476 (35239) (**See Table 10**).

Any of the parameter addresses (3X register addresses Table 4) accessible in the instrument can be mapped to these 20 user assignable registers.

Parameters (3X registers addresses) that resides in different locations may be accessed by the single request by re-mapping them to adjacent address in the user assignable registers area.

The actual address of the parameters (3X registers addresses) which are to be assessed via address 0x1450 to 0x1476 are specified in 4X Register 0x157D to 0x1590 (**See Table 11**).

Table 10 : User Assignable 3X & 4X Data Registers

Address (3X)	Address (4X)	Assignable Register	Modbus Start Address (Hex)	
			High Byte	Low Byte
35201	45201	Assignable Register 1	14	50
35203	45203	Assignable Register 2	14	52
35205	45205	Assignable Register 3	14	54
35207	45207	Assignable Register 4	14	56
35209	45209	Assignable Register 5	14	58
35211	45211	Assignable Register 6	14	5A
35213	45213	Assignable Register 7	14	5C
35215	45215	Assignable Register 8	14	5E
35217	45217	Assignable Register 9	14	60
35219	45219	Assignable Register 10	14	62
35221	45221	Assignable Register 11	14	64
35223	45223	Assignable Register 12	14	66
35225	45225	Assignable Register 13	14	68
35227	45227	Assignable Register 14	14	6A
35229	45229	Assignable Register 15	14	6C
35231	45231	Assignable Register 16	14	6E
35233	45233	Assignable Register 17	14	70
35235	45235	Assignable Register 18	14	72
35237	45237	Assignable Register 19	14	74
35239	45239	Assignable Register 20	14	76

Table 11 : User Assignable mapping register (4X registers)

Address (4X)	Assignable Register	Modbus Start Address (Hex)	
		High Byte	Low Byte
405501	Map Address for Assignable Register 1	15	7D
405502	Map Address for Assignable Register 2	15	7E
405503	Map Address for Assignable Register 3	15	7F
405504	Map Address for Assignable Register 4	15	80
405505	Map Address for Assignable Register 5	15	81
405506	Map Address for Assignable Register 6	15	82
405507	Map Address for Assignable Register 7	15	83
405508	Map Address for Assignable Register 8	15	84
405509	Map Address for Assignable Register 9	15	85
405510	Map Address for Assignable Register 10	15	86
405511	Map Address for Assignable Register 11	15	87
405512	Map Address for Assignable Register 12	15	88
405513	Map Address for Assignable Register 13	15	89
405514	Map Address for Assignable Register 14	15	8A
405515	Map Address for Assignable Register 15	15	8B
405516	Map Address for Assignable Register 16	15	8C
405517	Map Address for Assignable Register 17	15	8D
405518	Map Address for Assignable Register 18	15	8E
405519	Map Address for Assignable Register 19	15	8F
405520	Map Address for Assignable Register 20	15	90

Example : Assigning parameter to user assignable registers
To access the voltage2 (3X address 0x0002) and power factor1 (3X address 0x001E) through user assignable register assign these addresses to 4x register (Table 11) 0x157D and 0x157E respectively .

Assigning Query:

Device Address	01 (Hex)
Function Code	10 (Hex)
Starting Address Hi	15 (Hex)
Starting Address Lo	7D (Hex)
Number of Registers Hi	00 (Hex)*
Number of Registers Lo	02(Hex)*
Byte Count	04 (Hex)

Data Register-1High Byte	00 (Hex)	Voltage 2 * (3X Address 0x0002)
Data Register-1 Low Byte	02 (Hex)	
Data Register-2 High Byte	00 (Hex)	Power Factor 1 *(3X Address 0x001E)
Data Register-2 Low Byte	1E (Hex)	
CRC Low	E6 (Hex)	
CRC High	4A (Hex)	

* Note : Parameters should be assigned in Multiple of two i.e. 2,4,6,8.....20.

Response :

Device Address	01 (Hex)
Function Code	10 (Hex)
Start Address High	15 (Hex)
Start Address Low	7D (Hex)
Number of Registers Hi	00 (Hex)
Number of Registers Lo	02 (Hex)
CRC Low	D5 (Hex)
CRC High	DC(Hex)

Reading parameter data through user assignable registers:
In assigning query voltage 2 & power factor 1 parameters were assigned to 0x 157D & 0x157E (Table11) which will point to user assignable 3xregisters 0x1450 and 0x1452 (table10). So to read voltage2 and power factor1 data reading query should be as below.

Query:

Device Address	01 (Hex)
Function Code	04 (Hex)
Start Address High	14 (Hex)
Start Address Low	50 (Hex)
Number of Registers Hi	00 (Hex)
Number of Registers Lo	04 (Hex)**
CRC Low	F0 (Hex)
CRC High	71 (Hex)

Start address high : Most significant 8 bits of starting address of user assignable register.
Start address low :Least significant 8 bits of starting address of user assignable register.

Number of register Hi : Most significant 8 bits of number of registers requested.
Number of register Lo : Least significant 8 bits of number of registers requested.

****Note : Two consecutive 16 bit register represent one parameter.**
Since two parameters are requested four registers are required

Response : (Volt2 = 219.30 / Power Factor1 = 1.0)

Device Address	01 (Hex)	
Function Code	04 (Hex)	
Byte count	08 (Hex)	
Data Register-1 High Byte	43 (Hex)	**Voltage 2 Data**
Data Register-1 Low Byte	5B (Hex)	
Data Register-2 High Byte	4E (Hex)	
Data Register-2 Low Byte	04 (Hex)	
Data Register-3 High Byte	3F (Hex)	**Power Factor 1 Data**
Data Register-3 Low Byte	80 (Hex)	
Data Register-4 High Byte	00 (Hex)	
Data Register-4 Low Byte	00 (Hex)	
CRC Low	79 (Hex)	
CRC High	3F (Hex)	

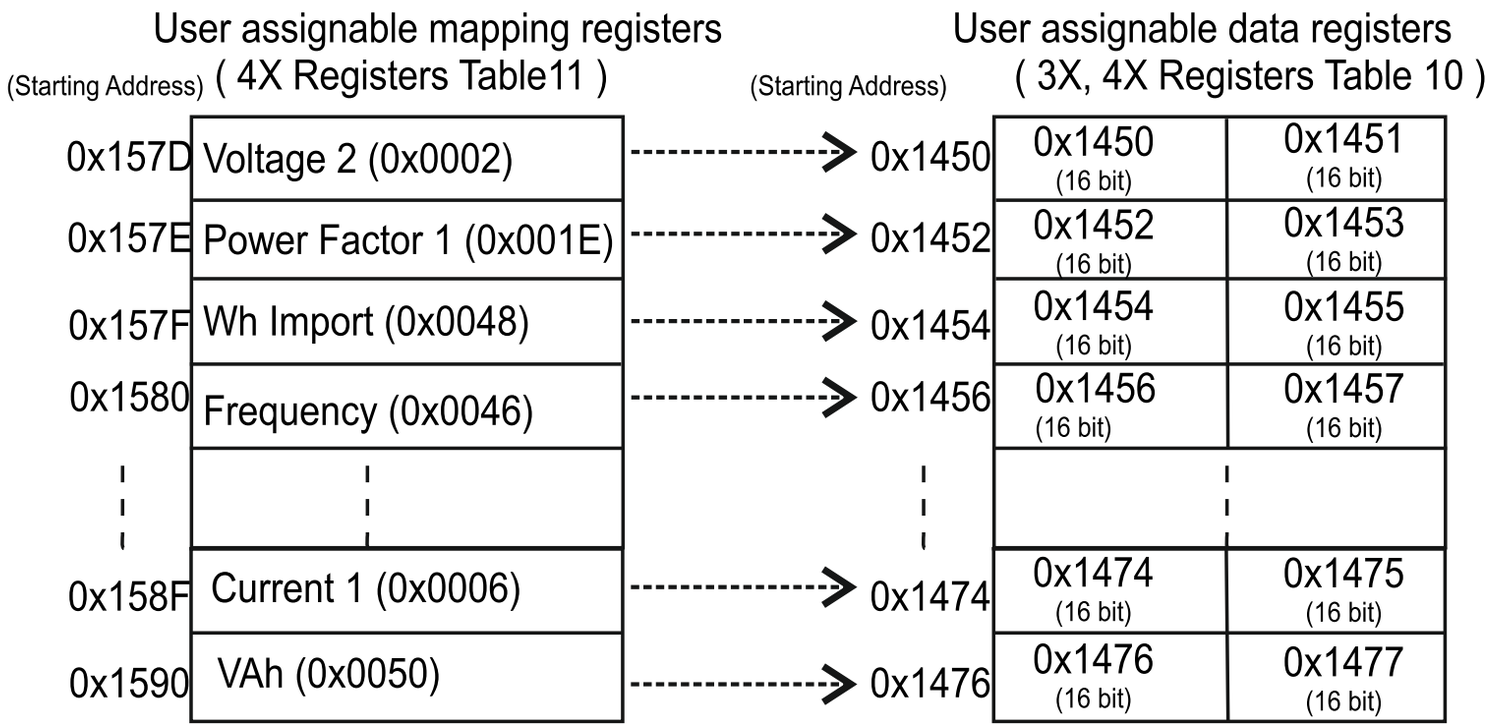

To get the data through user assignable register use following steps:

1) Assign starting addresses (Table3) of parameters of interest to a "User assignable mapping registers" in a sequence in which they are to be accessed (see section "**Assigning parameter to user assignable registers"**)
2) Once the parameters are mapped data can be acquired by using "User assignable data register" Starting address . i.e to access data of Voltage2, Power factor1,Wh import, Frequency send query with starting address 0x1450 with number of register 8 or individually parameters can be accessed for example if current1 to be accessed use starting address 0x1474. (See section **Reading parameter data through User assignable registers)**

10. Phasor Diagram :

Quadrant 1: 0° to 90°
Quadrant 2: 90° to 180°
Quadrant 3: 180° to 270°
Quadrant 4: 270° to 360°

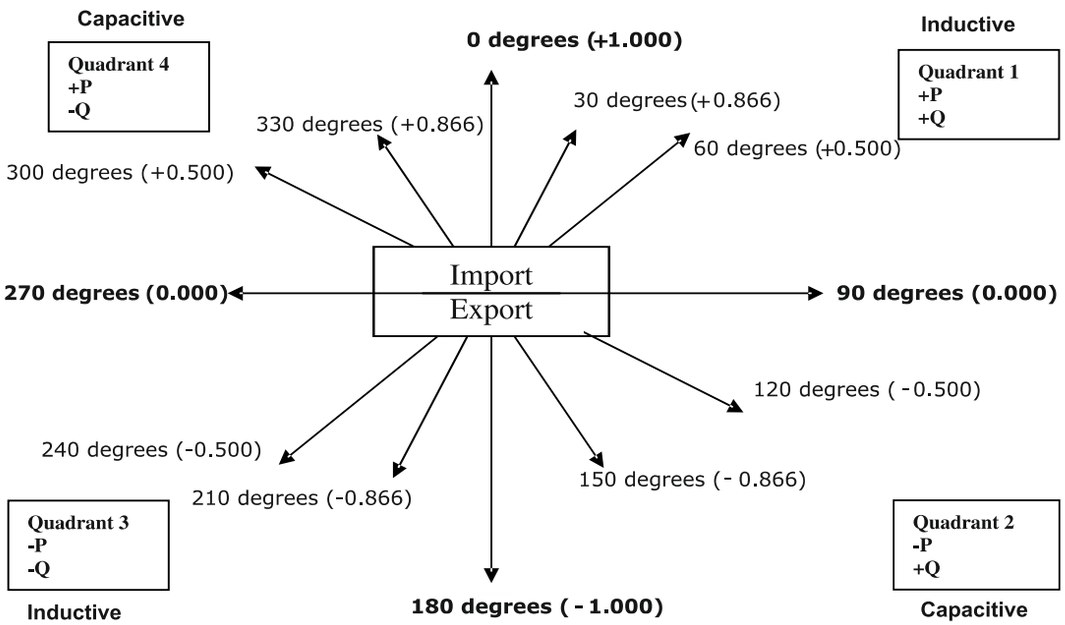

Connections	Quadrant	Sign of Active Power (P)	Sign of Reactive Power (Q)	Sign of Power Factor (PF)	Inductive / Capacitive
Import	1	+ P	+ Q	+	L
Import	4	+ P	- Q	+	C
Export	2	- P	+ Q	-	C
Export	3	- P	- Q	-	L

Inductive means current lags voltage,
Capacitive means current leads voltage.

When multifunction meter displays active power (P) with “+” (positive sign), the connection is “**Import**”.

When multifunction meter displays active power (P) with “-” (negative sign), the connection is “**Export**”.

11. Installation

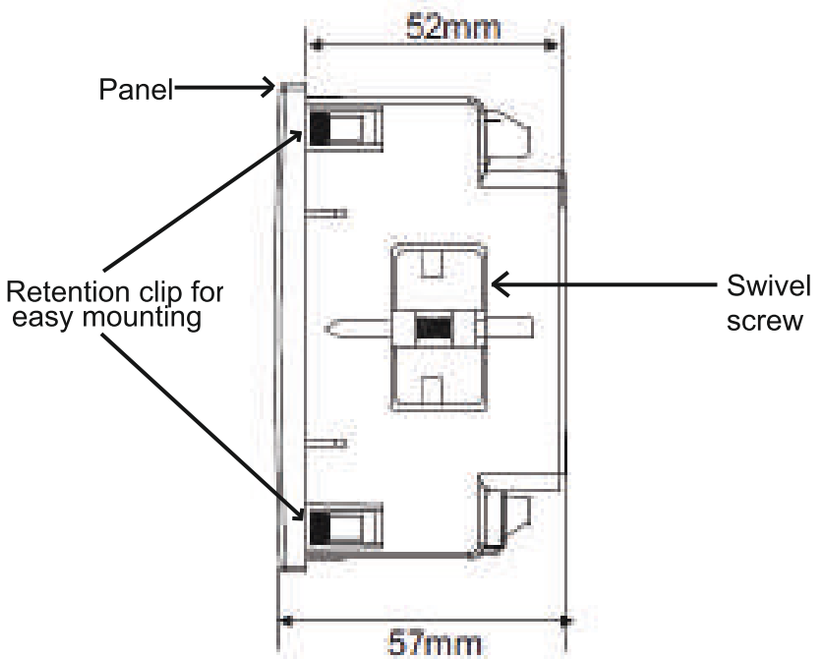

Panel Thickness : 1 - 3mm for self clicking,
1 - 6mm for swivel screws

Caution

1. **In the interest of safety and functionality this product must be installed by a qualified engineer, abiding by any local regulations.**
2. **Voltages dangerous to human life are present at some of the terminal connections of this unit. Ensure that all supplies are de-energised before attempting any connection or disconnection.**
3. **These products do not have internal fuses therefore external fuses must be used to ensure safety under fault conditions.**

Mounting of multifunction meter is featured with easy “Clip- in” mounting. push the meter in panel slot (size 92 x92 mm), it will click fit into panel with the four integral retention clips on two sides of meter. If required Additional support is provided with swivel screws as shown in figure.
The front of the enclosure conforms to IP50. Additional protection to the panel may be obtained by the use of an Optional panel gasket. The terminals at the rear of the product should be protected from liquids.

The multifunction meter should be mounted in a reasonably stable ambient temperature and where the operating temperature is within specified limit. Vibration should be kept to a minimum and the product should not be mounted where it will be subjected to excessive direct sunlight.

11.1 EMC Installation Requirements

This product has been designed to meet the certification of the EU directives when installed to a good code of practice for EMC in industrial environments,e.g.

1. Screened output and low signal input leads or have provision for fitting RF suppression components,such as ferrite absorbers, line filters etc., in the event that RF fields cause problems.

Note: It is good practice to install sensitive electronic instruments that are performing critical functions, in EMC enclosures that protect against electrical interference which could cause a disturbance in function.

2. Avoid routing leads alongside cables and products that are, or could be, a source of interference.

3. To protect the product against permanent damage, surge transients must be limited to 2kV pk. It is good EMC practice to suppress differential surges to 2kV at the source. The unit has been designed to automatically recover in the event of a high level of transients. In extreme circumstances it may be necessary to temporarily disconnect the auxiliary supply for a period of greater than 5 seconds to restore correct operation. The Current inputs of these products are designed for connection in to systems via Current Transformers only, where one side is grounded.

4. ESD precautions must be taken at all times when handling this product.

11.2 Case Dimension & Panel Cut Out

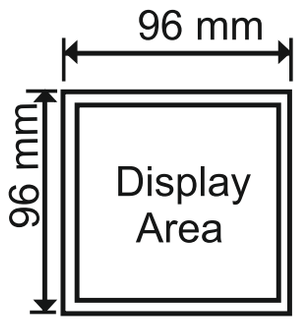

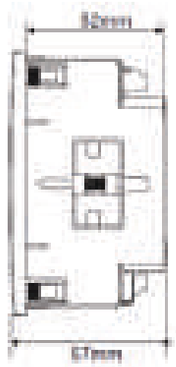

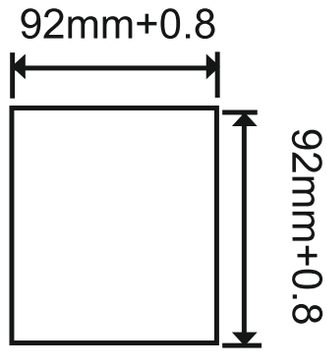

Panel Cutout

11.3 Wiring

Input connections are made directly to screw-type terminals with indirect wire pressure. numbering is clearly marked on the connector. Choice of cable should meet local regulations. terminal for both current and voltage inputs will accept upto 4mm^2 12AWG solid / 2.5 mm^2 stranded cable.

11.4 Auxiliary Supply

Meter should ideally be powered from a dedicated supply, however powered from the signal source, provided the source remains within it may be the limits of the chosen auxiliary voltage range.

Note : 1) It is recommended to use wire with lug for connection with meter.
2) For disconnecting the device a switch or circuit-breaker shall be included at the site and shall be within easy reach of the operator. The specification are as below.
For aux. = At least 1.5 times of applied Power supply.
For Measuring Input = At least 1.5 times of applied measuring inputs.

11.5 Fusing

It is recommended that all voltage lines are fitted with 1 amp HRC fuse.

11.6 Earth/Ground Connections

For safety reasons, CT secondary connections should be grounded in accordance with local regulations.

12. Connection Diagrams

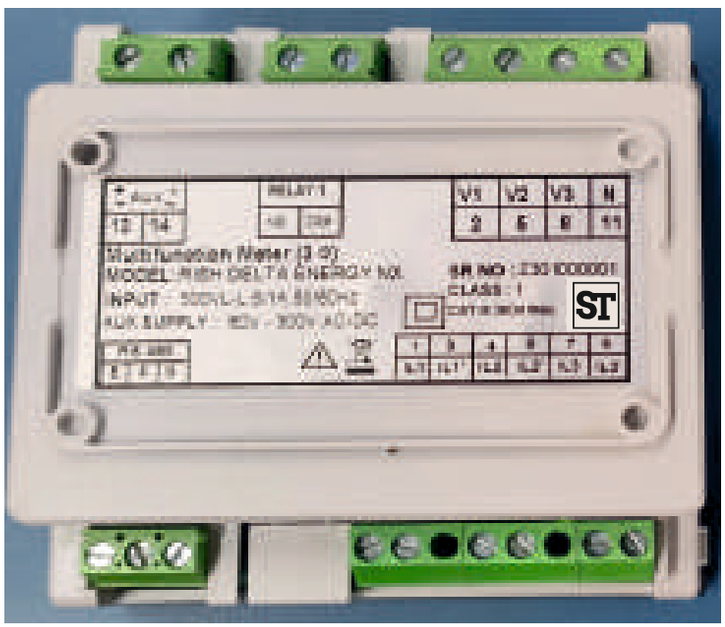

3P4W UNBALANCED LOAD
DIGITAL METERING SYSTEM

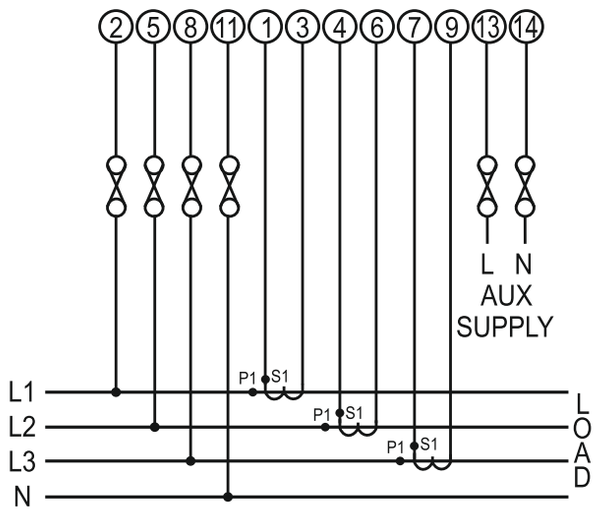

1P2W
DIGITAL METERING SYSTEM

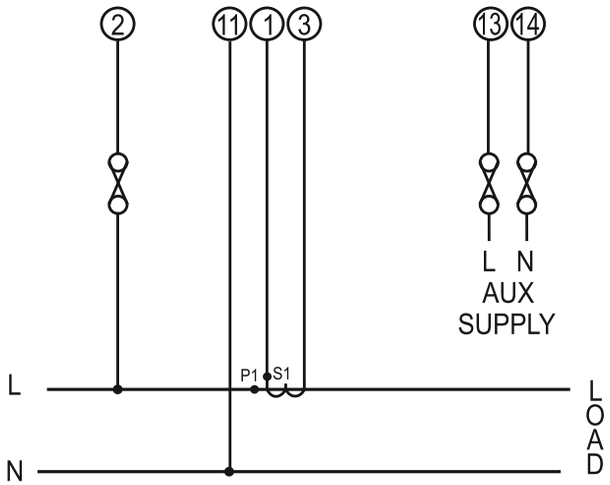

3P3W UNBALANCED LOAD
DIGITAL METERING SYSTEM

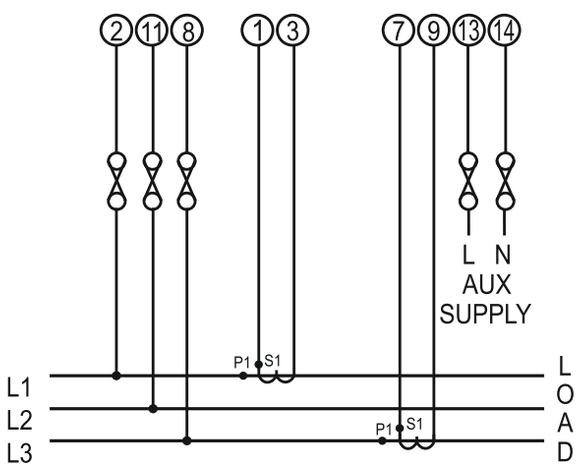

1P3W
DIGITAL METERING SYSTEM

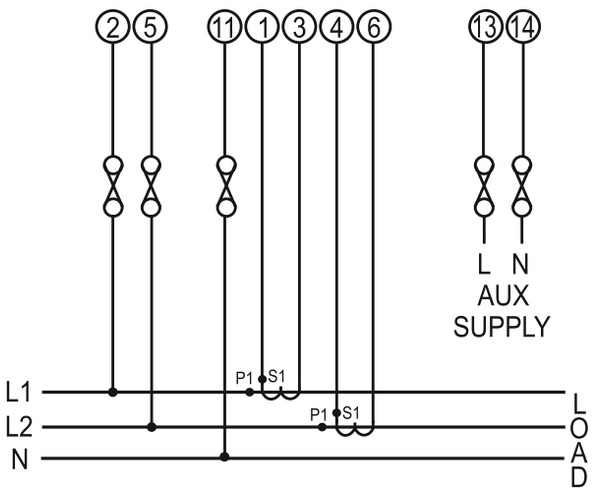

13. Specification

System

3P3W, 3P4W, 1P3W And 1P2W programmable at site

Inputs

Nominal Input Voltage	500 V_{L-L} (288.67V_{LN}) AC RMS
System PT Primary Values	100V_{L-L} to 1200 kV_{L-L}, programmable at site
System PT Secondary Values	100V_{L-L} to 500V_{L-L}, programmable at site
Max continuous input voltage	120% of Nominal Value
Nominal input voltage burden	0.3VA approx. per Phase (for ext. Aux. Meter)
Nominal Input Current	5A / 1A AC RMS
max continuous input current	120 % of rated value
Nominal input current burden	<0.3VA approx. per phase
SystemCTprimary values	Std. Values 1 to 9999A (1 or 5 Amp secondary)
System Secondary Values	1A / 5A, programmable at site

Overload withstand

Voltage input	2 x Rated Value (1s application repeated 10 times at 10s intervals)
Current input	20 x Rated Value (1s application repeated 5 times at 5 min. intervals)

Auxiliary Supply

Higher Auxillary Supply Range	60V to 300V AC/DC 230 V AC/DC nominal
Lower Auxillary Supply Range	20 - 60V AC/DC 24 V AC / 48 V DC nominal
Frequency Range	45 to 65 Hz
VA Burden	6 VA Approx.

Operating Measuring Ranges

Voltage	19VLL to 600 VLL 11VLN to 346VLN
Current	1 ... 120 % of Nominal Value
Frequency	40 .. 70 Hz
Power Factor	0.5 Lead ... 1 ... 0.5 Lag

Reference conditions for Accuracy

Reference temperature	$23^0C \pm 2^0C$
Input frequency	50 or 60Hz ± 2%
Input waveform	Sinusoidal (distortion factor 0.005)
Auxiliary supply frequency	50/60 Hz ± 1 %

Voltage Range	20 ... 100% of Nominal Value
Current Range	10 ... 100% of Nominal Value
Power / Energy	cosø / sinø=1 for Active / Reactive Power & Energy 10 ... 100% of Nominal Current & 20 ... 100% of Nominal Voltage.
Power Factor / Phase Angle	40 ... 100% of Nominal Current & 20 ... 100% of Nominal Voltage

Accuracy

Voltage	0.5 % of Nominal Value
Current	± 0.5 % of Nominal Value
Frequency	± 0.1% of mid frequency
Active power	± 1.0 % of Nominal Value
Reactive power	± 1.0 % of Nominal Value
Apparent Power	± 1.0 % of Nominal Value
Power factor	± 3°
Phase angle	± 3°
Active energy	Class 1 as per IEC 62053-21 & IEC 61557-12
Reactive energy	Class 2 as per IEC 62053-23 & IEC 61557-12
Apparent energy	Class 1 as per IEC 61557-12

Influence of variations

Temperature Coefficient (For Rated value range of use 0... 50°C)	0.05% /°C for Current (10..120% of Rated Value) 0.025% /°C for Voltage (10..120% of Rated Value)
Error change due to variation of an influence quantity	2 * Error allowed for the reference condition applied in the test.

Display

LED	3 line 4 digits, Display height : 14mm
Annunciation of units	Bright LED indication
Update rate	Approx. 1 seconds

Controls

User Interface	4 buttons

Standards

EMC Immunity	IEC 61326-1-2012*
Safety	IEC 61010-1-2018
IP for water & dust	IEC 60529
Pollution degree	2
Installation categoty	III

Isolation

High Voltage Test	1) 4kV RMS 50Hz for 1 minute between all electrical circuits 2) 3.3kV RMS 50Hz for 1 minute between Rs485 input and all electrical circuits.

*Note : The Instrument continues to operate at measuring accuracy of within ±3% for voltage and current during the test.

Environmental conditions

Operating temperature	-20 to +70 ^{0}C
Storage temperature	-25 to +75 ^{0}C (as per IEC 60688)
Relative humidity	0 .. 95 % RH (Non condensing)
Warm up time	3 minute (minimum)
Shock	30gn in 3 planes
Vibration	10 .. 150 ..10 Hz, 0.15mm amplitude
Altitude	≤ 2000 Mtrs

Installation category: CAT III

Enclosure

Enclosure front	IP 54
Enclosure back	IP 20

Dimensions

Bezel Size	96mm x 96mm DIN 43718
Panel cut out	$92^{+0.8}$mm X $92^{+0.8}$mm
Overall Depth	55 mm
Panel thickness	1 - 3mm for self clicking 1 - 6mm for swivel screws
Weight	250 grams Approx.

Pulse output Option

Relay	1CO
Switching Voltage & Current	250VAC , 5Amp. 30VDC , 5Amp
Default Pulse rate Divisor	1 per Wh (up to 3600W), 1 per kWh (up to 3600kW), 1 per MWh (3600 to 30000 kW)

Pulse rate Divisors	Programmable on site
10	1 per 10Wh (up to 3600W), 1 per 10kWh (up to 3600kW), 1 per 10MWh (3600 to 30000 kW)
100	1 per 100Wh (up to 3600W), 1 per 100kWh (up to 3600kW), 1 per 100MWh (3600 to 30000 kW)
1000	1 per 1000Wh (up to 3600W), 1 per 1000kWh (up to 3600kW), 1 per 1000MWh (3600 to 30000 kW)
Pulse Duration	60ms , 100ms or 200ms

Note : Above conditions are also applicable for Reactive & Apparent Energy .

ModBus (RS 485) Option :

Protocol	ModBus (RS 485)
Baud Rate	2.4k, 4.8k 9.6k, 19.2k, 38.4k, 57.6k (Programmable)
Parity	Odd or Even, with 1 stop bit, Or None with 1 or 2 stop bits

NOTE

The Information contained in these installation instructions is for use only by installers trained to make electrical power installations and is intended to describe the correct method of installation for this product. However, ‘manufacturer’ has no control over the field conditions which influence product installation.
It is the user’s responsibility to determine the suitability of the installation method in the user’s field conditions. ‘manufacturer’ only obligations are responsibility to determine the suitability of the installation method in the user’s field conditions. ‘manufacturer’ only obligations are those in ‘manufacturer’ standard Conditions of Sale for this product and in no case will ‘manufacturer’ be liable for any other incidental, indirect or consequential damages arising

Sifam tinsley
PRECISION INSTRUMENTATION

Sifam Tinsley Instrumentation Inc
2105 Barrett Park Drive,
Unit 105, Kennesaw, GA 30144
Phone/Fax: +1 678 881 0008 x 701
Toll Free: 800 879 6171
Email: info@sifamtinsley.com
Web: www.sifamtinsley.com

Sifam Tinsley Instrumentation Ltd.
Unit 1, Warner Drive,
Springwood Industrial Estate,
CM72YW, Braintree, Essex, UK
Contact Number: +44 (0) 1376335271
Email: sales@sifamtinsley.com
Web: www.sifamtinsley.co.uk